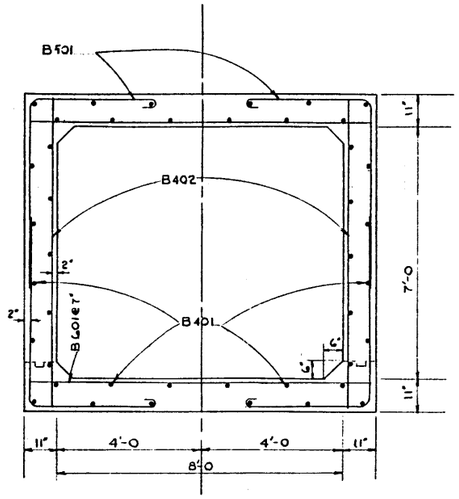


TYPICAL SECTION

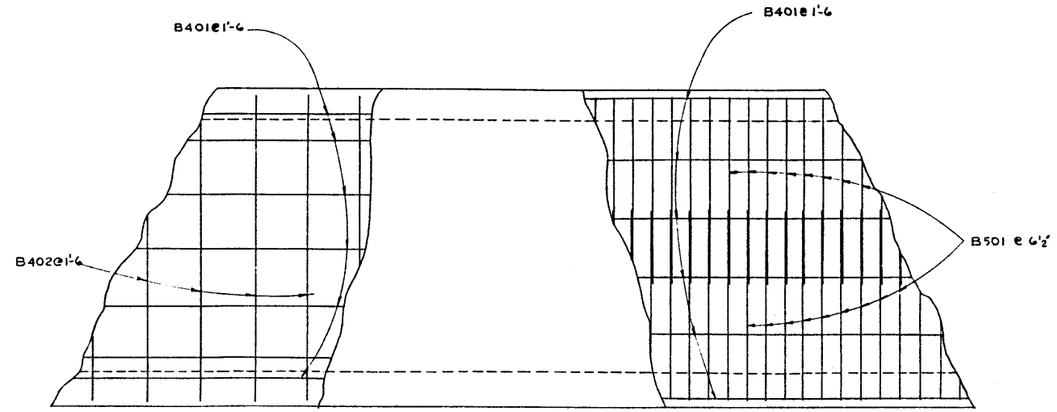


INSIDE FACE

OUTSIDE FACE

ELEVATION

SCALE: ½" = 1'-0

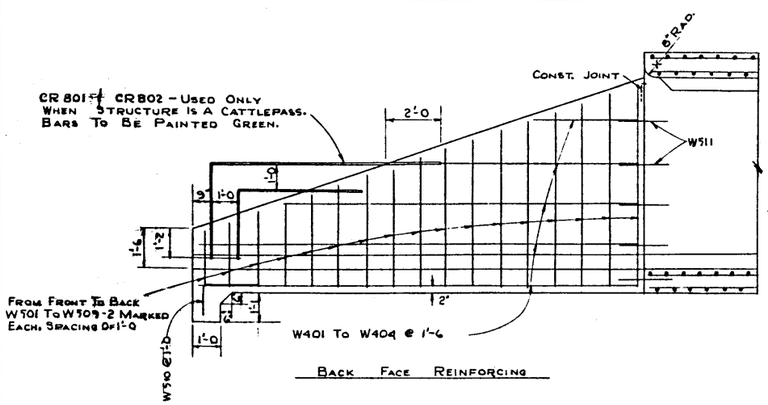


BACK FACE REINFORCING

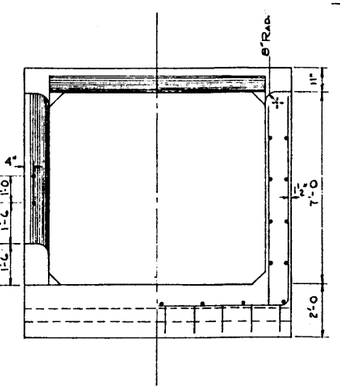


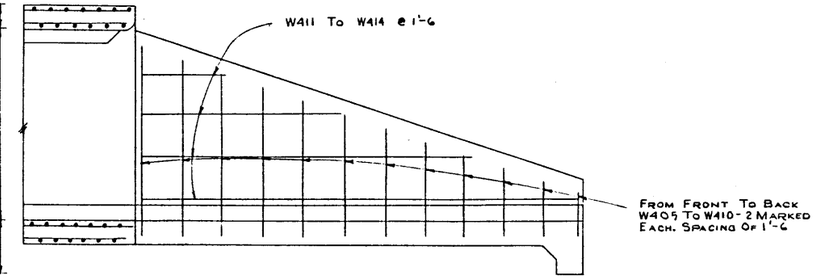


FRONT FACE REINFORCING

WING DETAILS

SCALE: ⅜" = 1'-0

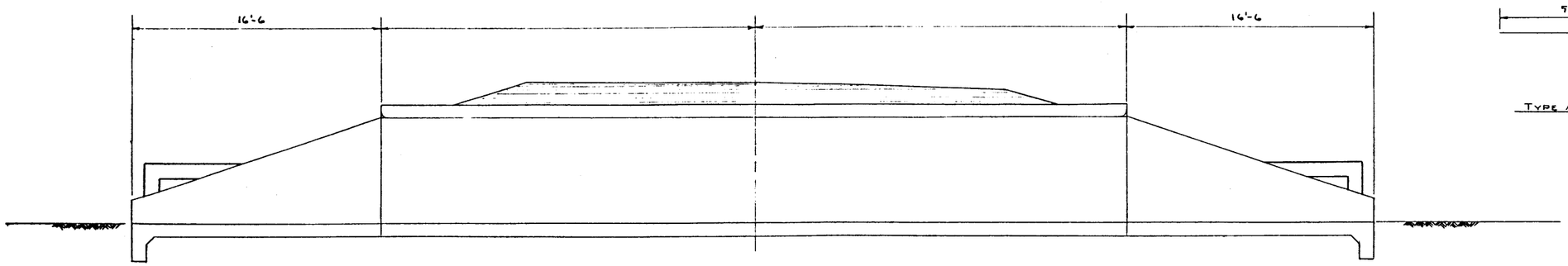


SECTION ALONG ℄ CATTLEPASS

SCALE: ¼" = 1'-0

## WINGWALL BAR LIST

| MARK | SIZE | TYPE | NO. | "X" | LENGTH | WEIGHT |
|---|---|---|---|---|---|---|
| W 501 | 5 | B | 2 | 2'-1 | 13'-8 | 28 |
| W 502 | 5 | B | 4 | 2'-6 | 14'-6 | 60 |
| W 503 | 5 | B | 4 | 3'-1 | 15'-8 | 65 |
| W 504 | 5 | B | 4 | 3'-9 | 17'-0 | 71 |
| W 505 | 5 | B | 4 | 4'-6 | 18'-6 | 77 |
| W 506 | 5 | B | 4 | 5'-1 | 19'-8 | 82 |
| W 507 | 5 | B | 4 | 5'-9 | 21'-0 | 87 |
| W 508 | 5 | B | 4 | 6'-6 | 22'-6 | 94 |
| W 509 | 5 | B | 4 | 7'-1 | 23'-8 | 99 |
| W 401 | 4 | Str. | 18 | | 16'-2 | 194 |
| W 402 | 4 | | 4 | | 13'-3 | 35 |
| W 403 | 4 | | 4 | | 8'-9 | 23 |
| W 404 | 4 | | 4 | | 4'-3 | 11 |
| W 405 | 4 | | 4 | | 2'-0 | 5 |
| W 406 | 4 | | 8 | | 2'-6 | 13 |
| W 407 | 4 | | 8 | | 3'-6 | 18 |
| W 408 | 4 | | 8 | | 4'-6 | 24 |
| W 409 | 4 | | 8 | | 5'-6 | 29 |
| W 410 | 4 | | 8 | | 6'-6 | 35 |
| W 411 | 4 | | 4 | | 4'-8 | 12 |
| W 412 | 4 | | 4 | | 9'-6 | 25 |
| W 413 | 4 | | 4 | | 13'-2 | 35 |
| W 414 | 4 | Str. | 4 | | 16'-2 | 43 |
| CR801 | 8 | D | 4 | 8'-6 | 12'-6 | 133 |
| CR802 | 8 | D | 4 | 4'-6 | 7'-6 | 80 |
| | | | | | | |
| W 510 | 5 | C | 20 | | 3'-0 | 63 |
| W 511 | 5 | Str. | 40 | | 2'-0 | 83 |

TOTAL : 1524 #

## BARREL BAR LIST

| | MARK | SIZE | NO. | TYPE | LENGTH | WEIGHT |
|---|---|---|---|---|---|---|
| COVER 0'-5" | B501 | 5 | | A | 9'-3 | |
| | B601 | 6 | | Str. | 9'-6 | |
| | B401 | 4 | | Str. | | |
| | B402 | 4 | | Str. | 8'-6 | |
| COVER 5'-10" | | | | | | |
| COVER 10'-15" | | | | | | |

BAR TYPES

ALL DIMENSIONS OUT TO OUT

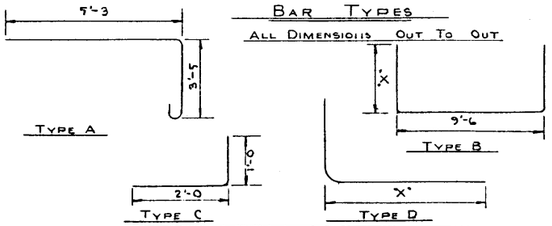


DESIGNED BY ____ DATE ____ 19__
DETAILED BY ED. L.S. DATE MAY 1 19 56
CHECKED BY ____ DATE ____ 19__

| NO. | DATE | DESCRIPTION | BY |
|---|---|---|---|
| 4 | | | |
| 3 | | | |
| 2 | | | |
| 1 | | | |

REVISIONS

# STANDARD 7×8 CATTLEPASS

GOVERNMENT OF THE PROVINCE OF ALBERTA
DEPARTMENT OF HIGHWAYS
BRIDGE BRANCH, EDMONTON

FILE NO. ____ HWY. NO. ____
LOCATION ____ SCALE ____
STREAM ____ SHEET ____ OF ____

DWG. NO. S 664

AT & U - RECORDS CENTRE F18276