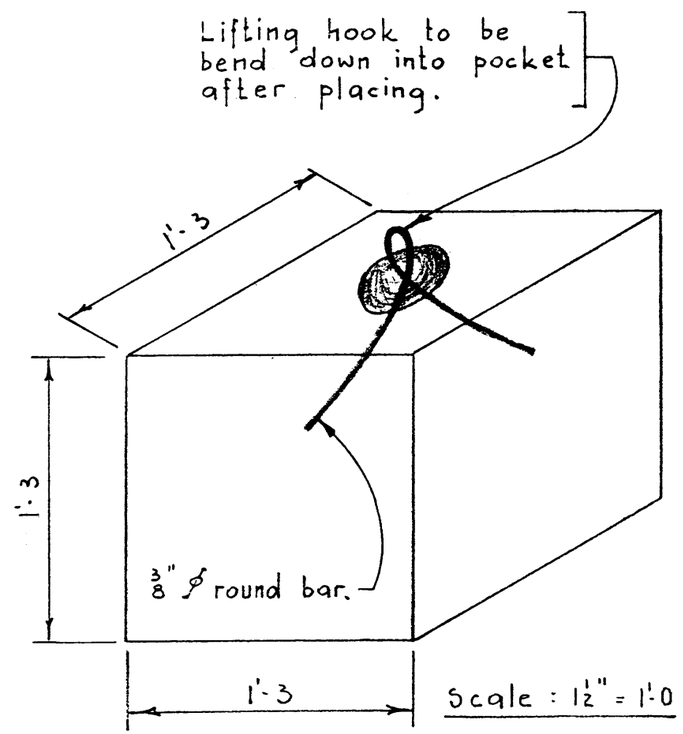

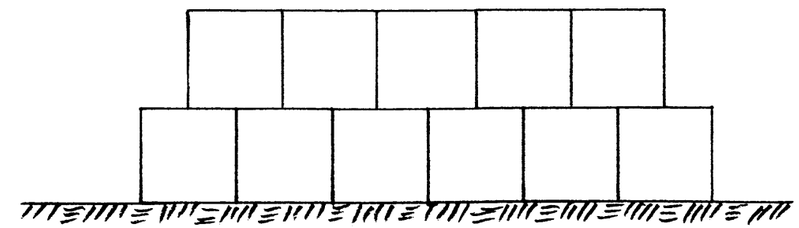

ELEVATION VIEW

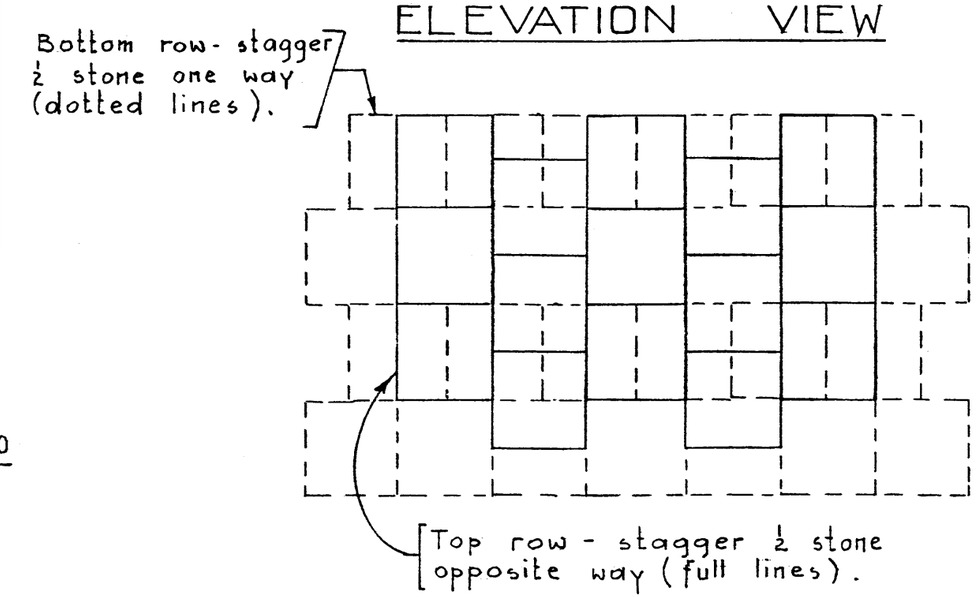

PLAN VIEW

Scale : ½" = 1'-0

NOTE

- Blocks to be cast individually.
- Concrete to be Class A (3,500 p.s.i.).
- Blocks to be placed tightly together.

PRECAST CONCRETE BLOCK

(Alternative for rock apron).

Drawn by: B.W.S.
Date: Aug. 9/62.

Dwg. No.

S-793

S-793

AT & U - RECORDS CENTRE
F199818