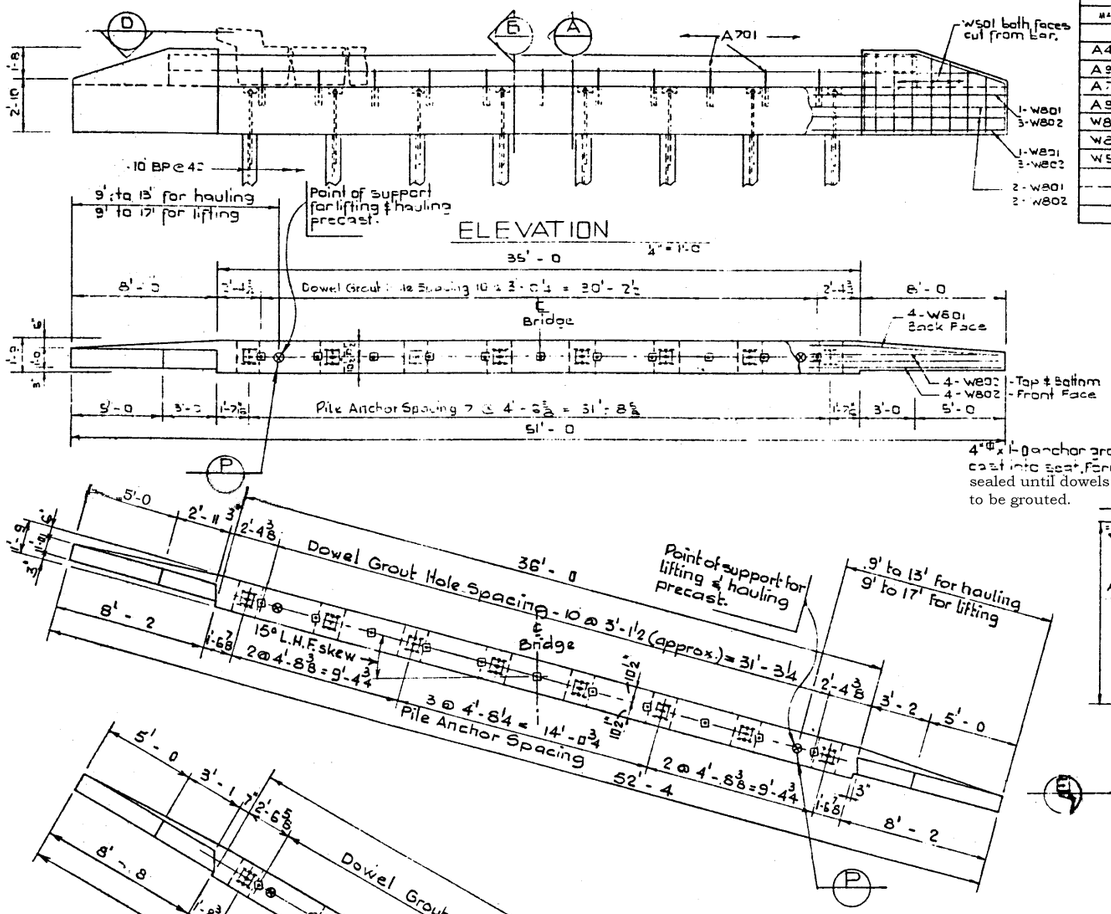

BAR LIST — 1 Abutment 0° Skew							
MARK	SIZE	NO	TYPE	"X"	"Y"	LENGTH	WEIGHT
A401	4	36	A			7'-8	184
A901	9	4	B	34'-8		39'-2	506
A701	7	11	Str.			7'-4	52
A902	9	6	Str.			34'-8	717
W801	8	5	C	7'-10		10'-11	233
W802	8	16	Str.			10'-11	466
W501	5	6	Str.			40'-0	250

Total lbs. 2,398

BAR LIST — 1 Abutment 15° Skew							
MARK	SIZE	NO	TYPE	"X"	"Y"	LENGTH	WEIGHT
A401	4	37	A			7'-8	189
A901	9	4	B	35'-8		38'-2	519
A701	7	11	Str.			7'-4	52
A902	9	6	Str.			35'-8	726
W801	8	8	C	8'-0		11'-1	237
W802	8	16	Str.			11'-1	472
W501	5	6	Str.			40'-0	250

Total lbs. 2,445

BAR LIST — 1 Abutment 30° Skew							
MARK	SIZE	NO	TYPE	"X"	"Y"	LENGTH	WEIGHT
A401	4	41	A			7'-8	210
A901	9	4	B	33'-8		42'-2	575
A701	7	11	Str.			7'-4	52
A902	9	6	Str.			33'-8	803
W801	8	8	C	8'-0		11'-1	237
W802	8	16	Str.			11'-1	475
W501	5	6	Str.			40'-0	250

Total lbs. 2,630

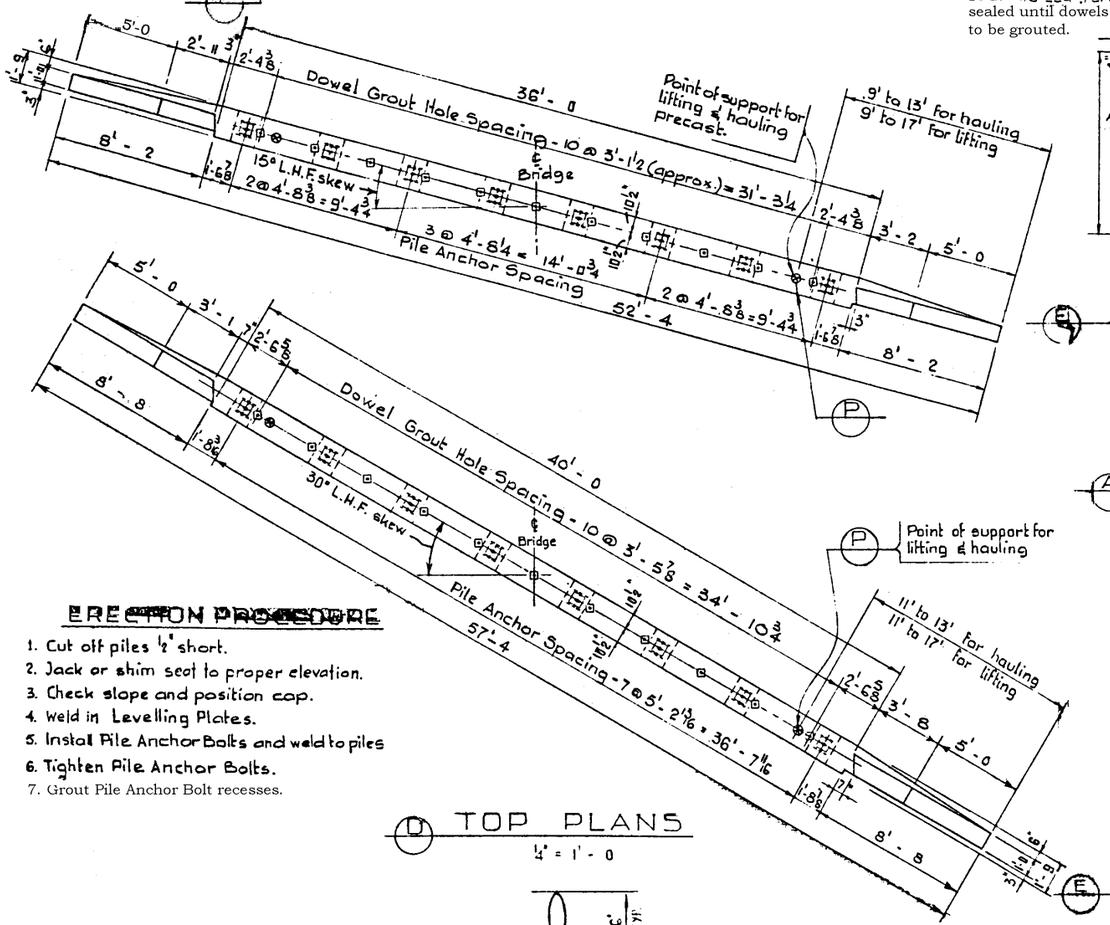

D TOP PLANS
1/4" = 1'-0

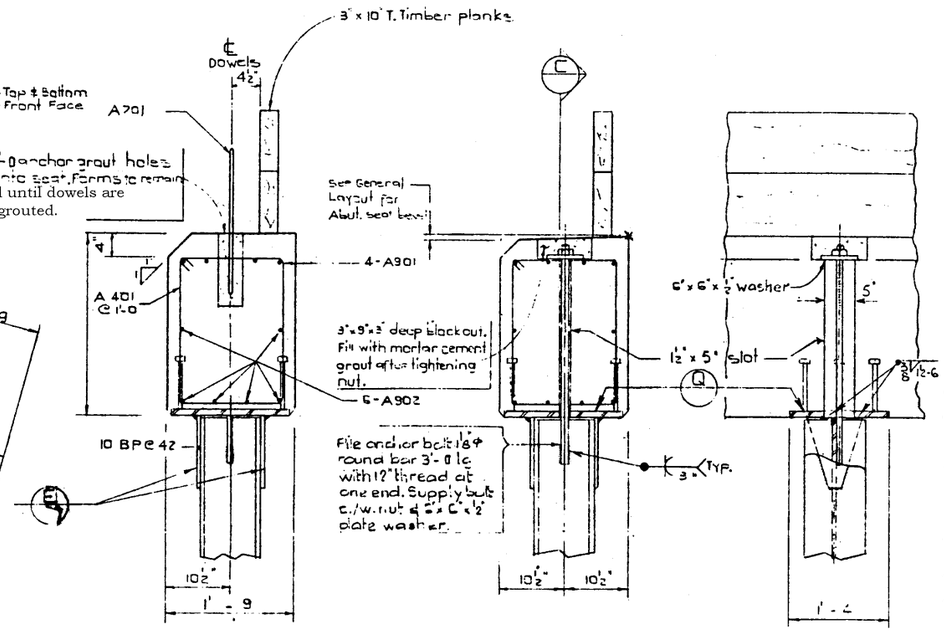

A SECTION
1/2" = 1'-0

B SECTION
1" = 1'-0

C SECTION
1" = 1'-0

GENERAL NOTES :

- All requirements of the Bridge Branch Specification for the Supply of Structural Steel for Bridges. (Specification No. B187-64) shall be met.
- All welding shall conform to A.W.S. Specification. When temperature is below 32°F preheat the base metal to at least 200°F for 3" both laterally and in advance of the welding. Welding shall not be done when the temperature is lower than 0°F unless protection is provided for the operator and the enclosure is heated to at least 70°F.
- Painting Specification:
  Top of Steel H Piles to the bottom of 2'x5' trench and bearing plates shall receive 2 coats of primer in the field.

  Primer shall conform to CGSB Spec 1-GP-166A Type III and shall have a dry thickness of 1.5 to 2.5 mils.

  Before painting, all steel shall be sandblasted in accordance with SSPC-SP-6-63 T of the Steel Structures Painting Council.

  Painting shall not commence until approval of the cleaning has been obtained from the Engineer.
- All steel shall meet A.S.T.M. A36 or CSA G40.12.
- Piles shall be driven to elevations shown on General Layout or to a bearing value of 30 tons when bearing capacity is determined by a bearing formula.
- Concrete shall be of standard weight aggregate with a maximum size of 3/4". Minimum compressive strength shall be 4000 p.s.i. at 28 days. Air entrainment shall be not less than 5%. Units are to conform to the requirements of the Bridge Branch Specifications for Manufacture of Precast Concrete Units, B-191-64.
- Precast abutment to be in upright position and supported at points indicated at all times.
- All exposed corners to have 3/4" fillet or chamfer.
- All concrete surfaces except bottom and fill side of wingwalls and seat to be given a Class 5 finish.
- All reinforcing steel shall have 2" clear cover unless otherwise noted.
- Bearing seat and wingwalls shall be plant cast in a single unit.
- Neoprene bearing pads:
  0° skew - 9" x 3/8" x 35'-0, 60 Hardness
  15° skew - 9" x 3/8" x 36'-0, 60 Hardness
  30° skew - 9" x 3/8" x 40'-0, 60 Hardness.
- Weight of precast pier caps:
  0° skew - 35 kips
  15° skew - 36 kips
  30° skew - 38 kips.

ERECTION PROCEDURE

1. Cut off piles 1/2" short.
2. Jack or shim seat to proper elevation.
3. Check slope and position cap.
4. Weld in Levelling Plates.
5. Install Pile Anchor Bolts and weld to piles
6. Tighten Pile Anchor Bolts.
7. Grout Pile Anchor Bolt recesses.

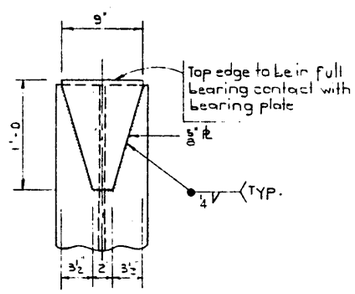

E LEVELLING PLATE DETAIL
16-Req'd
1 1/2" = 1'-0

BAR TYPES :

(All bar dimensions are out to out.)

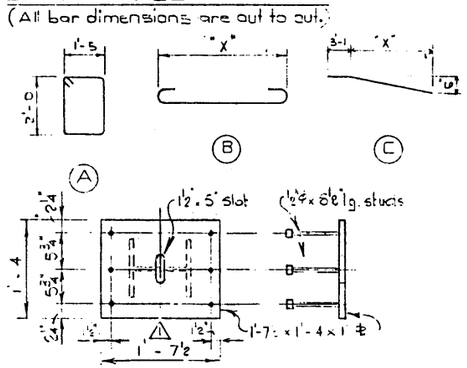

Q BEARING PLATE DETAIL
1" = 1'-0

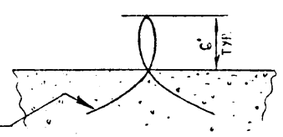

Lifting hooks 4 - 1/2" - 7 wire prestressing strands on top of seat. Min. embedment length to be 5'-0 each end. Burn off after use.

P LIFTING HOOK DETAIL
1 1/2" = 1'-0

NO.	DATE	DESCRIPTION	BY
4			
3			
2			
1	Seat & Levelling Plate No. 1 1'-0		T.B.

REVISIONS

STANDARD TYPE M BRIDGE
30' ROADWAY, L.H.F. SKEW
ABUTMENT

GOVERNMENT OF THE PROVINCE OF ALBERTA
DEPARTMENT OF HIGHWAYS AND TRANSPORT
BRIDGE BRANCH, EDMONTON

FILE NO. ____ HWY. NO. ____ DWG. NO. S-1029
LOCATION ____ SCALE ____
STREAM ____ SHEET ____ OF ____

DESIGNED BY S. Lee DATE April 1971
DETAILED BY L. Kohlmann DATE April 1971

1

AT & U - RECORDS CENTRE