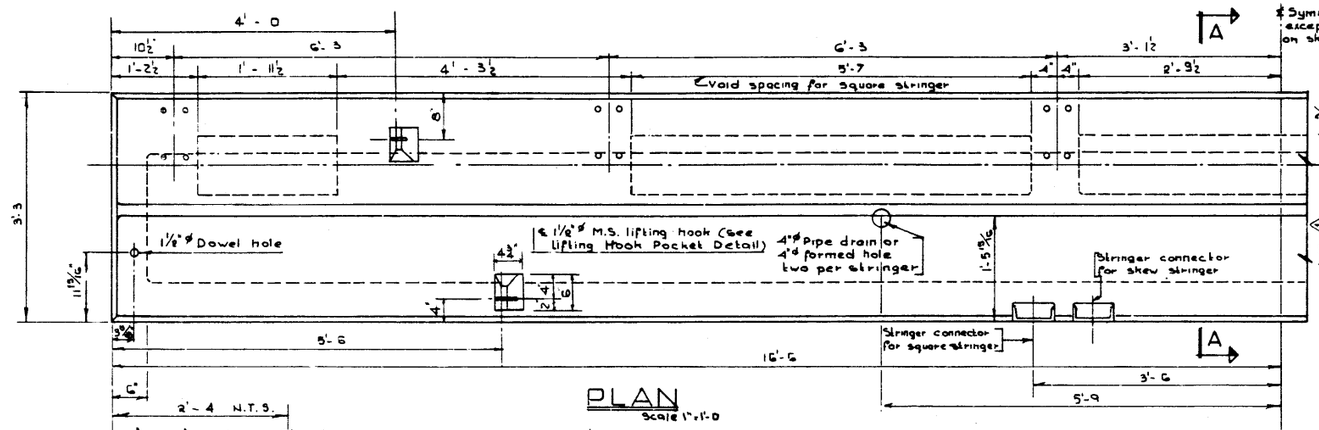

PLAN
Scale 1" = 1'-0

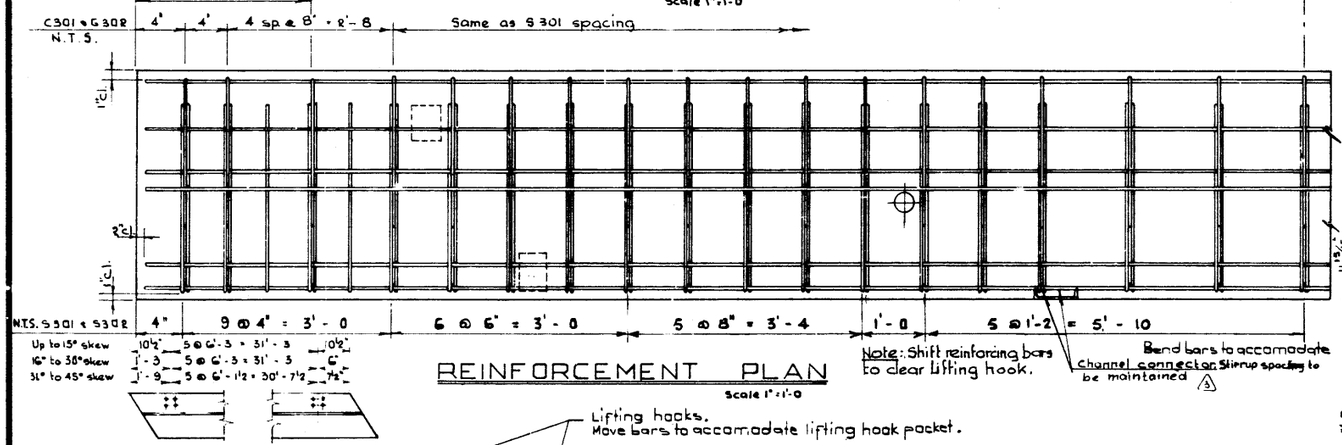

REINFORCEMENT PLAN
Scale 1" = 1'-0

Note: Shift reinforcing bars to clear lifting hook.

Bend bars to accomodate Channel connector. Stirrup spacing to be maintained (3)

ANCHOR BOLT LOCATION FOR SKEWED ENDS N.T.S.

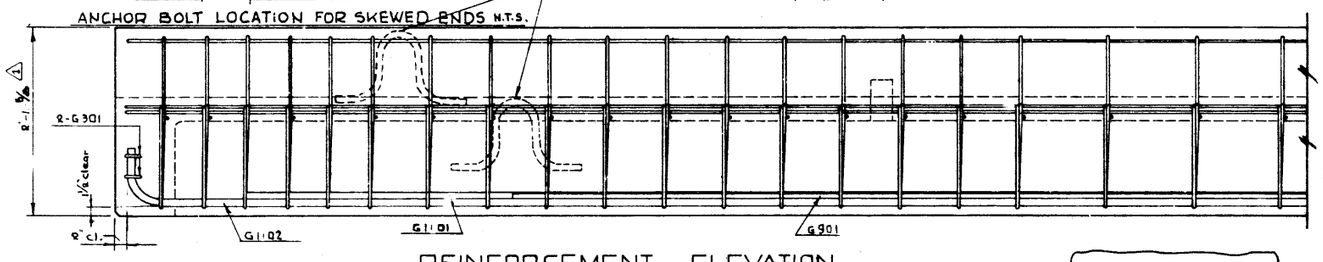

REINFORCEMENT ELEVATION
Scale: 1" = 1'-0

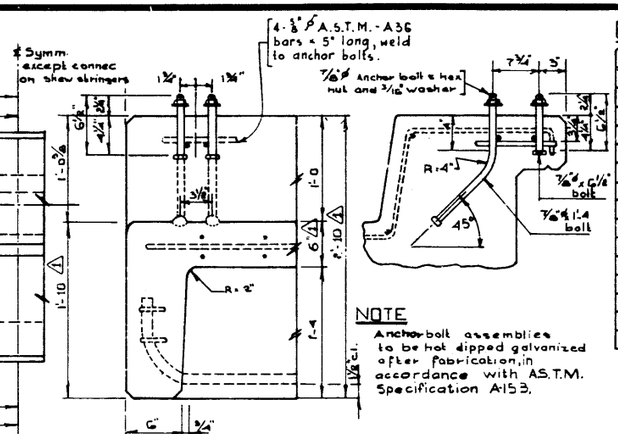

NOTE
Anchor bolt assemblies to be hot dipped galvanized after fabrication, in accordance with A.S.T.M. Specification A153.

ANCHOR BOLT DETAILS
Scale 1⅛" = 1'-0

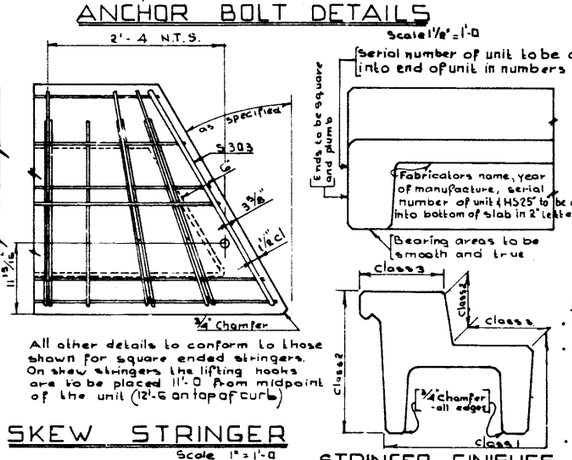

All other details to conform to those shown for square ended stringers. On skew stringers the lifting hooks are to be placed 11'-0 from midpoint of the unit (12'-6 on top of curb)

SKEW STRINGER
Scale 1" = 1'-0

STRINGER FINISHES
Scale ¾" = 1'-0

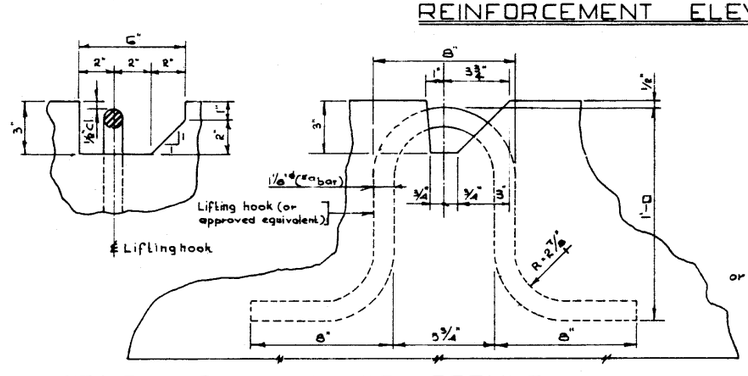

LIFTING HOOK POCKET DETAILS
Scale: 3" = 1'-0

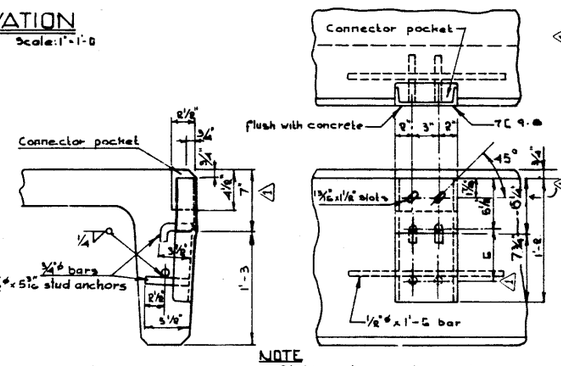

NOTE
Slots are to be machine made, smooth and to the dimensions shown

STRINGER CONNECTORS
Scale: 1½" = 1'-0

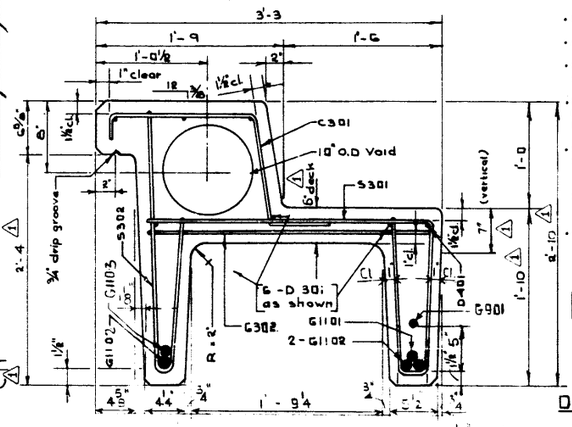

SECTION A - A
1½" = 1'-0

BAR LIST

Mark	Size	No	Type	X	Length	Weight
C301	3	45	C		3'-3	53
D301	3	6	Str		32'-8	74
D401	4	1	Str		32'-8	22
G301	3	4	D	2'-7	3'-6	5
G302	3	45	Str		2'-8	46
G901	9	1	Str		22'-6	77
G1103	11	1	Str		29'-6	157
G1101	11	1	Str		30'-0	159
G1102	11	3	D	32'-8	34'-1	543
S301	3	53	A		6'-4"	126 (3)
S302	3	53	B		4'-4"	86 (3)
S303	3	2	E	Skew ends only		

Total Weight (lbs): 1349 (3)

All dimensions are out to out

BAR TYPES

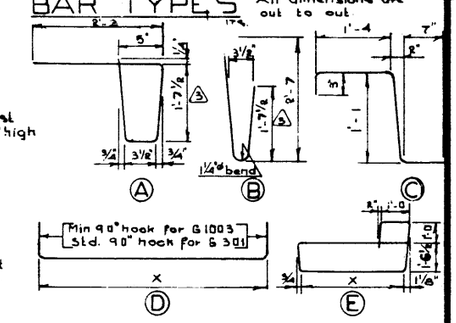

GENERAL NOTES

DESIGN - Live Load A.A.S.H.O. HS 25-44 modified as shown

- Dead Load - Includes allowance for 2" wearing surface.
- Concrete - to be standard weight aggregates with maximum aggregate size of 3/4 inch. Minimum 28 day compressive strength to be 4000 p.s.i.

CONSTRUCTION

- Entrained Air shall be not less than 5%.
- Diameters of all bends shall conform to the recommended minimums and all hooks, unless otherwise noted shall conform to the recommended sizes detailed in the A.C.I. Manual of Standard Practice for Detailing Reinforced Concrete Structures.
- Each stringer shall have a cast camber of 3/4 inch.
- All acute angles on skewed stringers shall have 3/4 inch chamfer.
- Concrete shall attain at least 30% of the specified 28 day compressive strength before the units are stripped from the forms or lifted.
- Each connector is to be allowed one 3/4" diameter x 2" H.T. bolt, one heavy hex semi finished nut and three hardened washers (Supplied by Dept.).
- Stringers shall conform to the requirements of the Alberta Government Specification for the Manufacture of Precast Concrete Bridge Units.

ERECTION

- Any free space between the connectors shall be filled with washers.

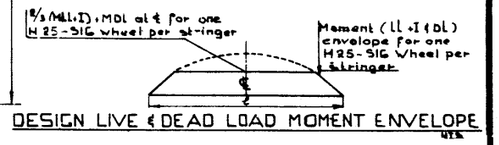

DESIGN LIVE & DEAD LOAD MOMENT ENVELOPE
NTS

HS 25 - TRUCK

NO.	DATE	DESCRIPTION	BY
3			
4			
3	21-9-73	Bar List Note & Dimensions	R.L.F.
2	7-3-73	Name changed from "HC"	R.L.F.
1	7-9-73	Stringer depth changed	R.L.F.

REVISIONS

APPROVED
CHIEF BRIDGE ENGINEER
DATE Aug 9/73

PROVINCE OF ALBERTA
DEPARTMENT OF HIGHWAYS AND TRANSPORT
BRIDGE BRANCH

PRECAST CONCRETE
33 FT. SPAN TYPE "VH"
CURB STRINGER

DESIGNED	DRAWN BY	DATE	CHECKED BY	DATE	STREAM	LOCATION	HWY. NO.	SCALE	FILE NO.	SHEET	OF	DWG. NO.
J.C.VIH	R.SIDTS	JULY.1973						as shown				S-1093