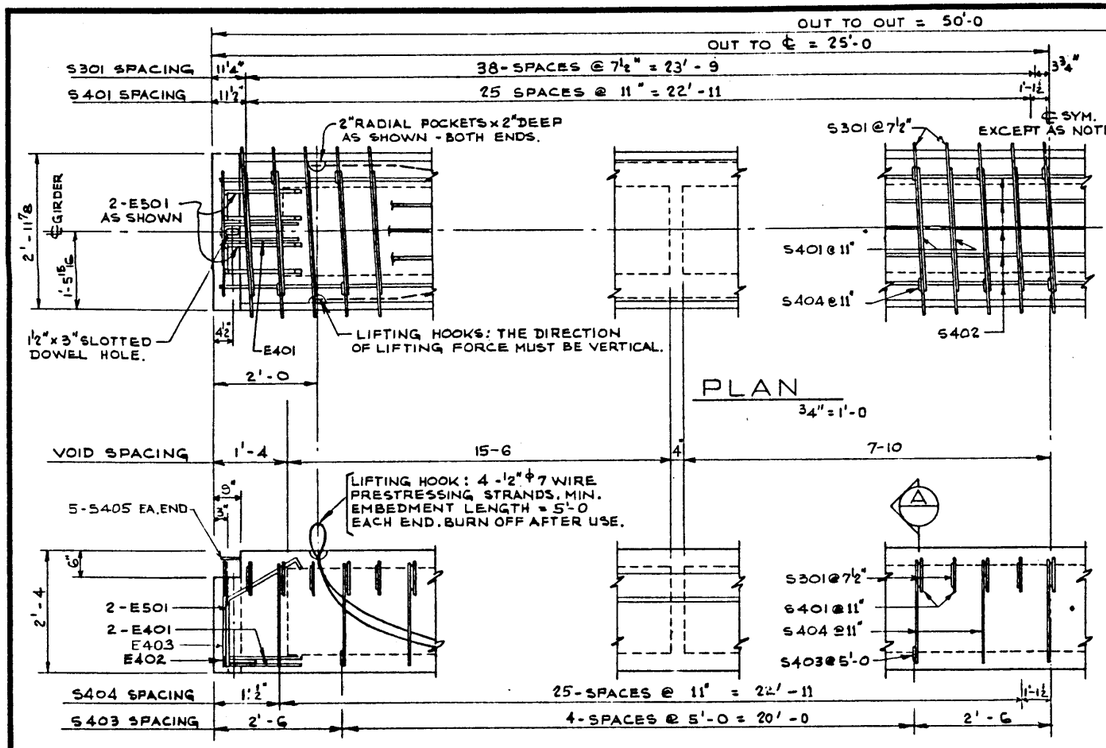

PLAN
¾" = 1'-0

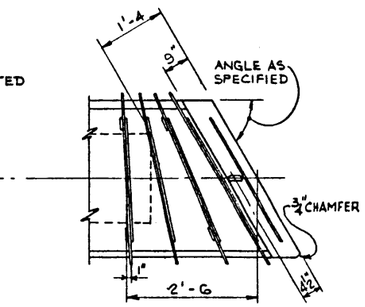

SKEW END
¾" = 1'-0

NOTE:
BARS SIMILAR TO SQUARE GIRDER BUT LENGTH AND PLACING TO SUIT SKEW.

BAR TYPES N.T.S.
(ALL BAR DIMENSIONS ARE OUT TO OUT)

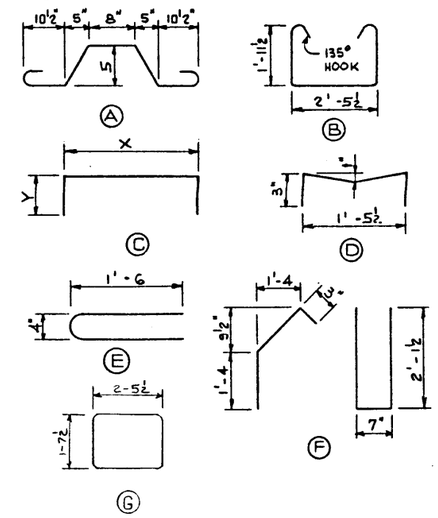

BAR LIST: FOR UNSKEWED GIRDER							
MARK	SIZE	NO.	TYPE	X	Y	LENGTH	WEIGHT
S 301	3	78	A			4'-5	130
S 404	4	5	B			7'-3	262
S 401	4	54	C	2'-5½	8½"	3'-11	141
S 402	4	1	STR.			49'-8	33
S 403	4	10	D			2'-0	13
E 401	4	4	E			3'-2	8
E 402	4	2	C	2'-6½	6"	3'-7	5
E 501	5	4	F			6'-11	29
S 405	4	10	STR			5'-0	33
E 403	4	2	G			9-0	12

TOTAL LBS: 686

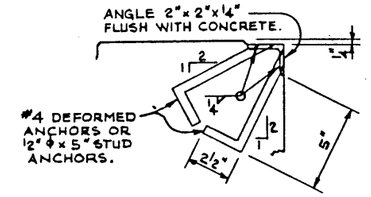

SECTION
3" = 1'-0

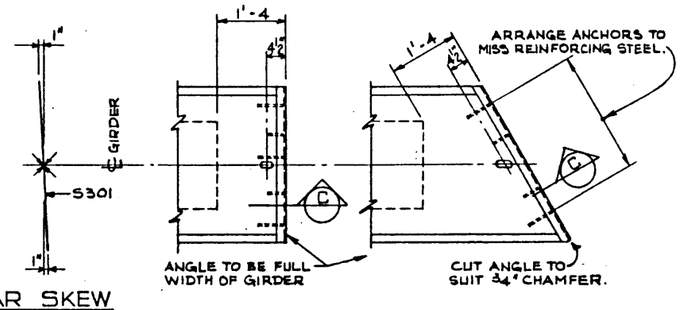

BAR SKEW

PROTECTION ANGLE
(PROVIDE WHEN BLOCKOUT NOT CALLED FOR) ¾" = 1'-0
— AT ABUTMENTS ONLY —

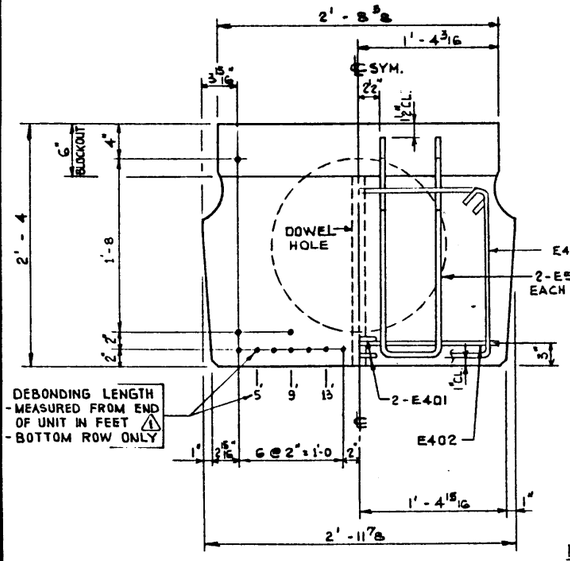

END VIEW
1½" = 1'-0

NOTE:
20 - ½" ϕ 7 WIRE STRANDS, REQUIRED PER GIRDER.

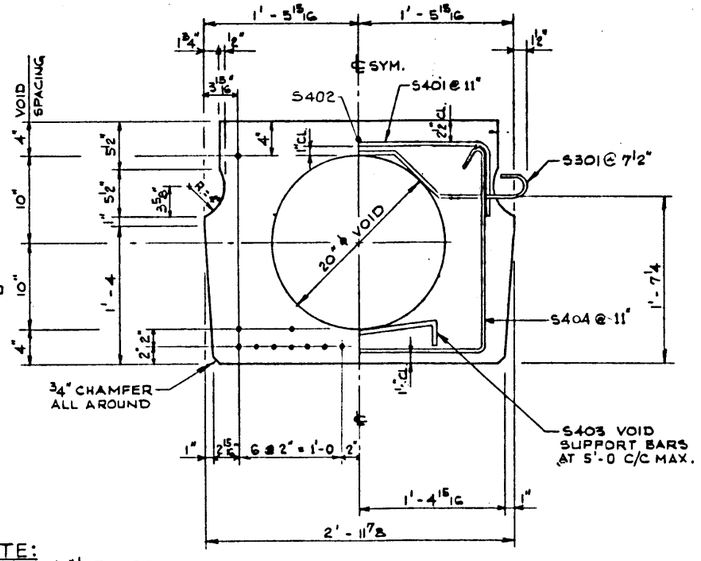

SECTION
1½" = 1'-0

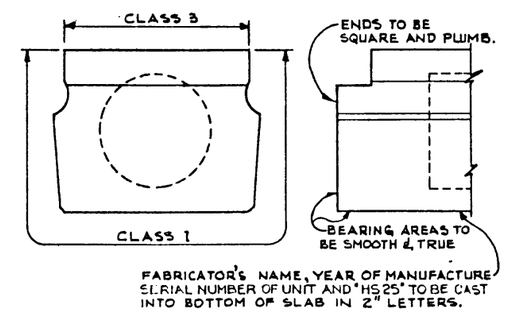

GIRDER FINISHES
1" = 1'-0

GENERAL NOTES

DESIGN

AASHO 1969 SPECIFICATION.

LOADING: 0.60 OF ONE WHEEL LINE OF AN HS25-44 TRUCK PLUS FULL DEAD LOAD PLUS 2 INCH WEARING SURFACE.

CALCULATED WEIGHT OF ONE GIRDER = 28.0 KIPS.

MATERIALS:

CONCRETE SHALL BE MANUFACTURED USING LIGHTWEIGHT COARSE AGGREGATE AND SAND FINES. LIGHTWEIGHT AGGREGATE SHALL CONFORM TO THE REQUIREMENTS OF A.S.T.M. SPECIFICATION C 330 WITH MAXIMUM AGGREGATE SIZE OF ¾ INCH. MINIMUM COMPRESSIVE STRENGTH SHALL BE 5000 PSI AT 28 DAYS. UNIT WEIGHT OF THE CONCRETE SHALL BE 120 LBS. PER CUBIC FOOT PLUS OR MINUS 5% IN THE PLASTIC STATE. ENTRAINED AIR SHALL BE NOT LESS THAN 5%.

PRESTRESSING STEEL SHALL BE ½ INCH DIAMETER - 7 WIRE - 270K STRAND.

FABRICATION

GIRDERS SHALL CONFORM TO THE REQUIREMENTS OF THE ALBERTA BRIDGE BRANCH SPECIFICATION B 190-64 FOR THE MANUFACTURE OF PRESTRESSED CONCRETE BRIDGE UNITS.

REINFORCEMENT: DIAMETERS OF ALL BENDS SHALL CONFORM TO THE RECOMMENDED MINIMUMS AND ALL HOOKS, UNLESS OTHERWISE NOTED, SHALL CONFORM TO THE RECOMMENDED SIZES DETAILED IN THE A.C.I. MANUAL OF STANDARD PRACTICE FOR DETAILING REINFORCED CONCRETE STRUCTURES.

PRESTRESSING STEEL: INITIAL TENSIONING LOAD = 28.91 K/STRAND
DESIGN LOAD = 22.34K/STRAND

CONCRETE MUST ATTAIN 4000 PSI COMPRESSIVE STRENGTH BEFORE THE PRESTRESSING FORCE IS TRANSFERRED.

THE SURFACE OF GROUT KEYS AND END BLOCKOUTS SHALL BE SANDBLASTED, TO EXPOSE THE COARSE AGGREGATE.

ERECTION

LIFTING FORCE AT EACH HOOK MUST BE NOT MORE THAN 35° FROM THE VERTICAL LINE AT ALL TIMES. GIRDER SURFACE MUST BE LEVEL AT ALL TIMES.

NO	DATE	DESCRIPTION	BY
1	DEC. 5/73	DEBONDING LENGTH	R.W.L

REVISIONS

APPROVED
CHIEF BRIDGE ENGINEER
DATE

PROVINCE OF ALBERTA
DEPARTMENT OF HIGHWAYS AND TRANSPORT
BRIDGE BRANCH

50'-0 TYPE "VM"-28" GIRDER
HS 25 LOADING

DESIGNED	DRAWN BY	DATE	CHECKED BY	DATE	STREAM	LOCATION	HWY. NO.	SCALE	FILE NO.	SHEET	DWG NO.
R.W. LYNE	V.B. & F.B.	NOV. 73						SHOWN		OF	S-1102

M P 207