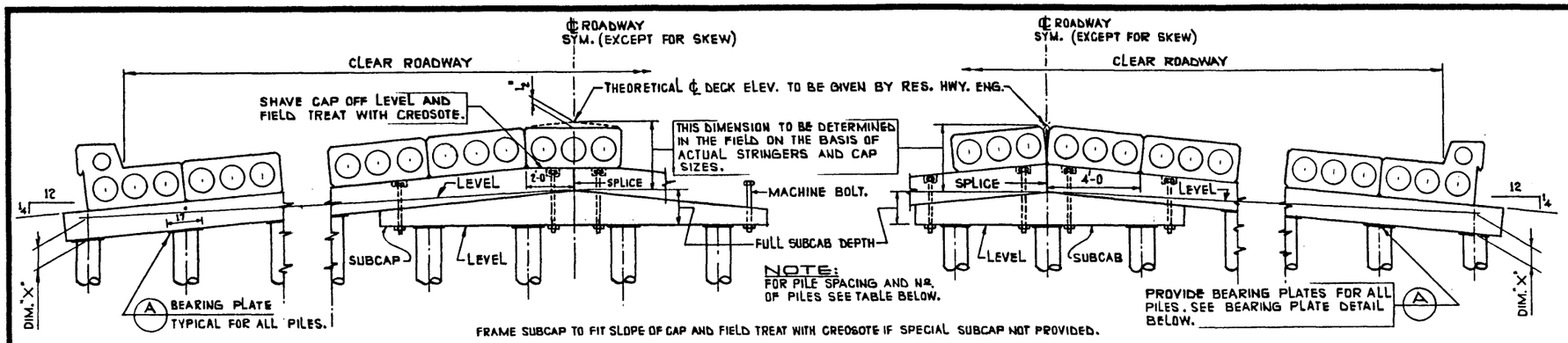

CAP SPLICE DETAIL

CROWNED ROADWAY WITH EVEN NUMBER OF PILES. N.T.S.

CAP SPLICE DETAIL

CROWNED ROADWAY WITH ODD NUMBER OF PILES. N.T.S.

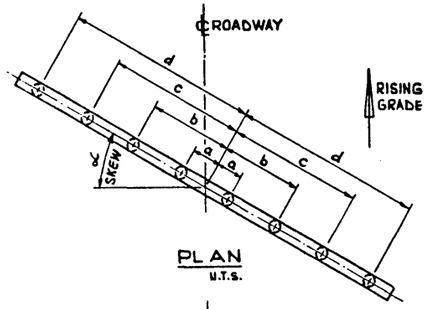

PLAN

N.T.S.

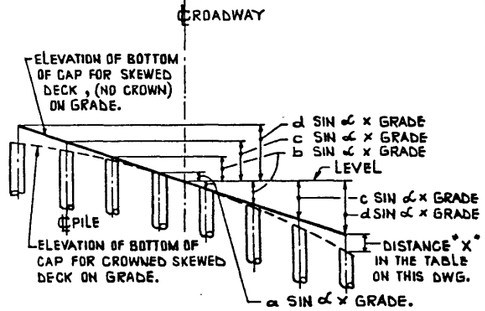

ELEVATION

N.T.S.

NOTE:
PILE CUTOFFS FOR SKEWED CROWNED ROADWAYS ON GRADE TO BE OFFICE DESIGNED. SEE DRAWINGS: S-821, S-822, S-823 AND S-824.

SKEWED CROWNED RDWY. ON GRADE

CLEAR ROADWAY	SKEW°	CAP LENGTH	Nº. OF PILES	PILE SPACING	DIM. "X" (CROWN)
21'	0	26'	7	4'-0	3"
	15	27'		4'-1 11/16	
	30	30'		4'-7 7/16	
	45	36'		5'-7 7/8	
25'	0	30'	8	4'-0	3 1/2"
	15	31'		4'-1 11/16	
	30	35'		4'-7 7/16	
	45	42'		5'-7 7/8	
29'	0	34'	9	4'-0	4"
	15	36'		4'-1 11/16	
	30	39'		4'-7 7/16	
	45	48		5'-7 7/8	
33'	0	38'	10	4'-0	4 1/2"
	15	40'		4'-1 11/16	
	30	44'		4'-7 7/16	
	45	53'		5'-7 7/8	
37'	0	42'	11	4'-0	5"
	15	44'		4'-1 11/16	
	30	49'		4'-7 7/16	
	45	59'		5'-7 7/8	
41'	0	46'	12	4'-0	5 1/2"
	15	48'		4'-1 11/16	
	30	53'		4'-7 7/16	
	45	65'		5'-7 7/8	
45'	0	50'	13	4'-0	6"
	15	52'		4'-1 11/16	
	30	58'		4'-7 7/16	
	45	70'		5'-7 7/8	

THE ABOVE TABLE IS APPLICABLE TO VS SPAN LENGTH OF 20', 25', 30' AND 35'.

SWAY BRACING LAYOUT

SINGLE STOREY BRACING. DOUBLE STOREY BRACING TO BE USED WHEN HEIGHT IS OVER 14'-0. ALL SWAY BRACING 3"×10" OR 3"×12" PLANKS SPIKED AND BOLTED TO PILES AND CAP.

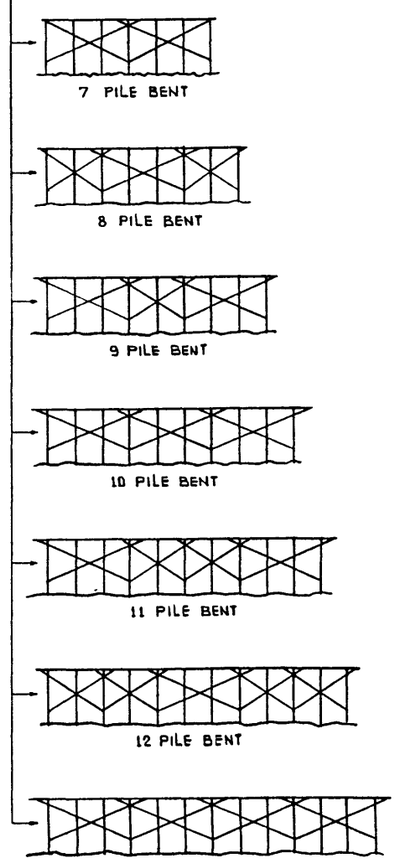

BILL OF HARDWARE

MARK	SIZE	TYPE	WASHERS	PLACING AND Nº REQUIRED
1	3/4"ϕ × 22"	DRIFTS		CAPS AND SUBCAPS TO PILES
2	3/4"ϕ × 24"	HEADLESS DRIFTS		STRINGER AND CURBS TO CAPS 2 PER STRINGER 2 PER CURB
3	5/8"ϕ × 26"	MACHINE BOLTS	2 - 5/8 O.G.	CAP SPLICE - 4 PER SPLICE
4	5/8"ϕ × 22"			DOUBLE SWAY BRACE TO CAP
5	5/8"ϕ × 20"			SINGLE SWAY BRACE TO CAP
6	5/8"ϕ × 7"	FLEX BEAM BOLTS	1 - 5/8" LOCK	GUARDRAIL TO POST
7	5/8"ϕ × 1 1/4"			GUARDRAIL SPLICE - 8 PER SPLICE
2 8	17"×12"×3/4"	BEARING PLATE		BETWEEN PILE TOPS AND CAPS

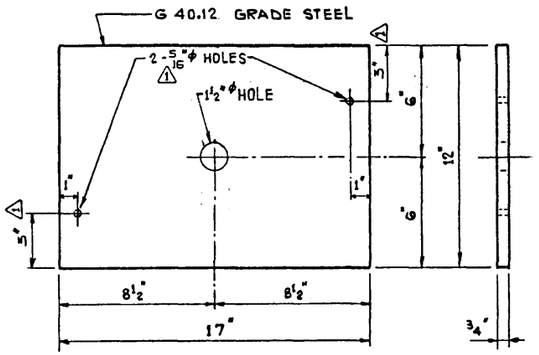

A BEARING PLATE DETAIL

PROVIDED BETWEEN PILE AND PILECAP (FOR ALL PILE CAPS). 3" = 1'-0

GENERAL NOTES

- PILE SPACING DESIGN BASED ON TYPE "VS" PRECAST CONCRETE STRINGERS.
- PILE SPACING DIMENSIONS GIVEN IN THE TABLE TO BE MEASURED ALONG CAP.
- FOR SQUARE SPANS THE PILE CUT OFFS IN 0° SKEW TABLE ARE APPLICABLE TO ANY GRADE.
- CAP SPLICE ON UNCROWNED BRIDGES IS TO BE OVER ANY TWO PILES.
- BEARING PLATES TO BE SUPPLIED BETWEEN ALL PILETOPS AND CAPS OR SUBCAPS.

1

NO.	DATE	DESCRIPTION	BY
2			
1			
3			
2	JULY 8/74	BEARING PLATE THICKNESS	M.J.P.
1	JUNE 28/74	NAIL HOLES STAGGERED	M.J.P.

REVISIONS

APPROVED
CHIEF BRIDGE ENGINEER
DATE June 6/74

Alberta HIGHWAYS AND TRANSPORT BRIDGE BRANCH

STANDARD "VS" PRECAST BRIDGES WITH T.T. SUBSTRUCTURE HS25 LOADING SHEET # 2

DESIGNED	DRAWN BY	DATE	CHECKED BY	DATE	STREAM	LOCATION	HWY. NO.	SCALE	FILE NO.	SHEET	DWG. NO.
M. J. PERLYNN	F.W. BUDA	MAY 74								2 of 2	S-1120