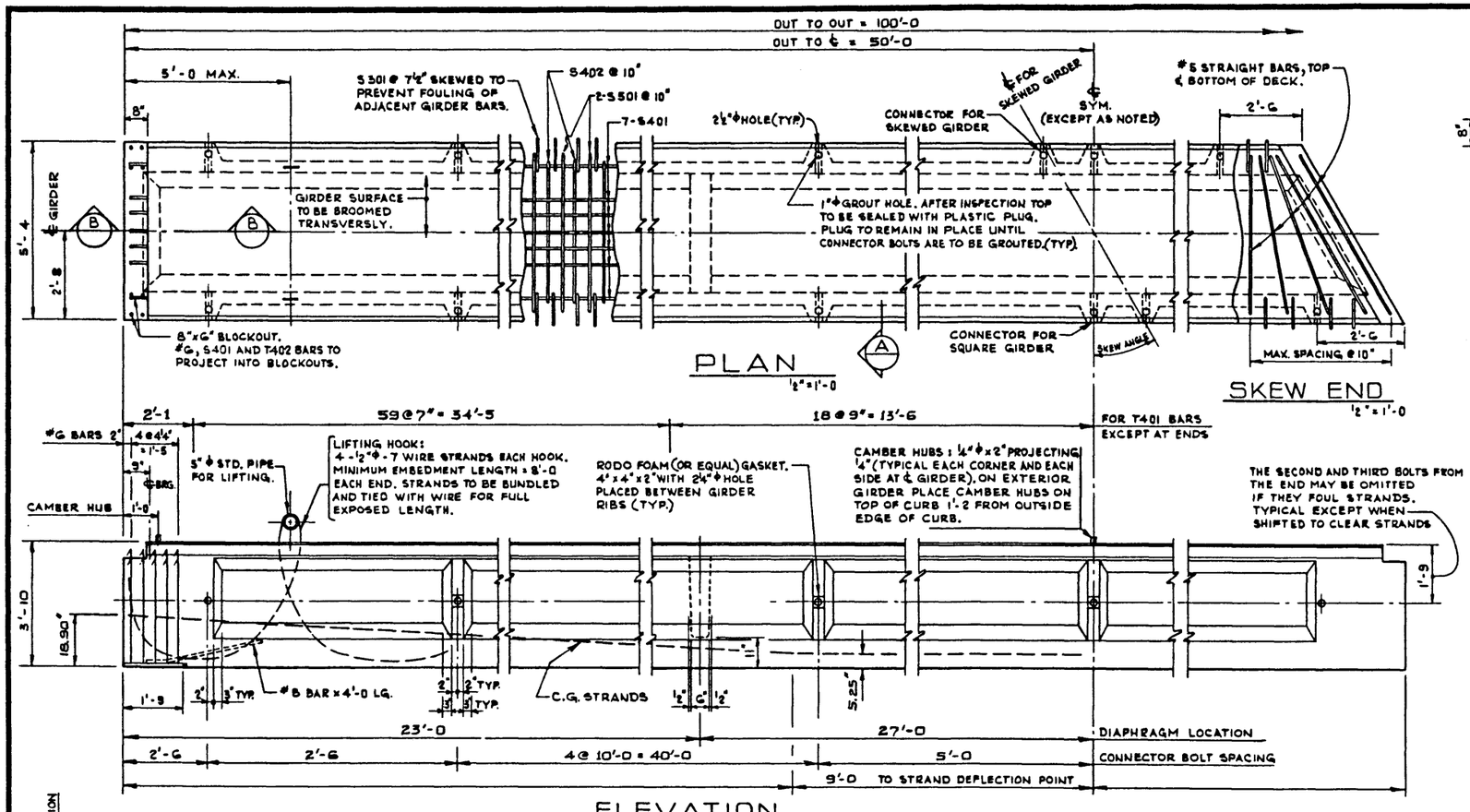

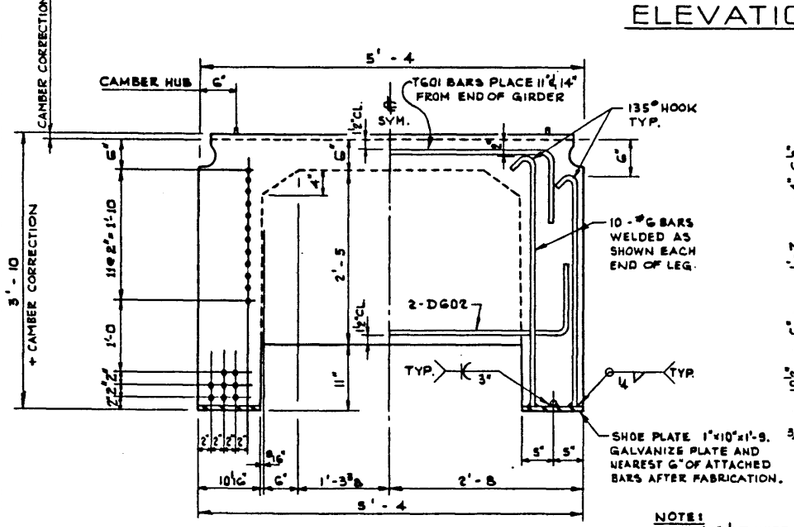

END VIEW
1" = 1'-0

NOTE: 40 - ½" Φ 7 WIRE STRAND, REQUIRED PER GIRDER.

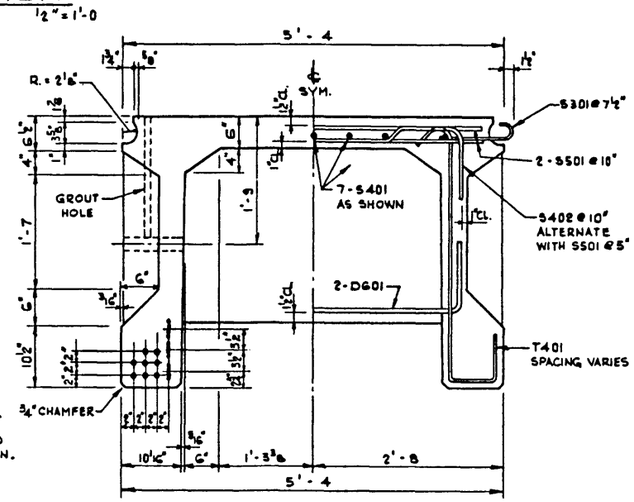

(A) SECTION
1" = 1'-0

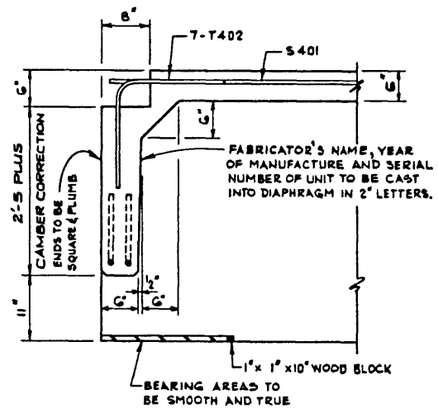

(B) SECTION
1" = 1'-0

BAR TYPES N.T.S.

(ALL BAR DIMENSIONS ARE OUT TO OUT)

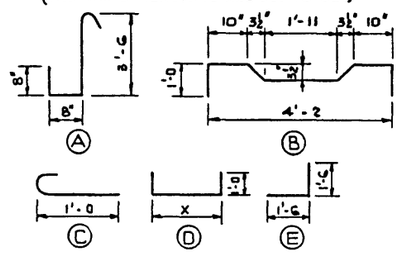

BAR LIST: FOR UNSKEWED GIRDER

MARK	SIZE	NO.	TYPE	X	Y	LENGTH	WEIGHT
S 301	3	316	C			1'-6	178
S 401	4	21	STR.			33'-11	476
S 402	4	119	B			6'-5	510
S 501	5	236	STR.			4'-9	1169
T 401	4	310	A			5'-4	1104
T 402	4	14	E			3'-0	28
T 601	6	4	D	4'-6		6'-6	39
D 601	6	4	D	4'-2		6'-2	37
D 602	6	4	D	5'-0		7'-0	42

TOTAL LBS: 3583

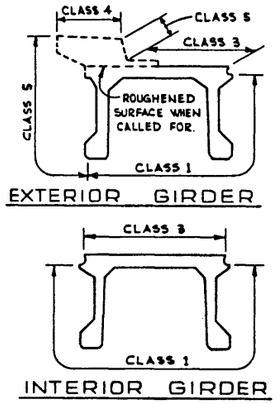

GIRDER FINISHES
N.T.S.

GENERAL NOTES:

DESIGN:

- A.A.S.H.O. 1973 SPECIFICATION EXCEPT ALLOWABLE FINAL CONCRETE STRESS = 350 PSI. IN TENSION. ℄ WEB REINFORCEMENT ACCORDING TO A.C.I. 318-71 (NOT LESS THAN A.A.S.H.O. MINIMUM).
- LOADING: 0.90 OF ONE WHEEL LINE OF AN HS 2 -44 TRUCK PLUS FULL DEAD LOAD PLUS 2½" WEARING SURFACE.

MATERIALS:

- CONCRETE SHALL BE MANUFACTURED USING LIGHTWEIGHT COARSE AGGREGATE AND SAND FINES. LIGHTWEIGHT AGGREGATE SHALL CONFORM TO THE REQUIREMENTS OF ASTM SPECIFICATION C 330 WITH MAXIMUM AGGREGATE SIZE OF 3/4". MINIMUM COMPRESSIVE STRENGTH SHALL BE 5,000 P.S.I. AT 28 DAYS. UNIT WEIGHT OF THE CONCRETE SHALL BE 120 LBS. PER CUBIC FOOT PLUS OR MINUS 5% IN THE PLASTIC STATE. ENTRAINED AIR SHALL BE NOT LESS THAN 5%.
- PRESTRESSING STEEL SHALL BE 1/2" DIAMETER - 7 WIRE 270 K STRAND.

FABRICATION:

- GIRDERS SHALL CONFORM TO THE REQUIREMENTS OF THE ALBERTA BRIDGE BRANCH SPECIFICATION B 190-64 FOR THE MANUFACTURE OF PRESTRESSED CONCRETE BRIDGE UNITS.
- REINFORCEMENT: DIAMETERS OF ALL BENDS SHALL CONFORM TO THE RECOMMENDED MINIMUMS AND ALL HOOKS, UNLESS OTHERWISE NOTED, SHALL CONFORM TO THE RECOMMENDED SIZES DETAILED IN THE A.C.I. MANUAL OF STANDARD PRACTICE FOR DETAILING REINFORCED CONCRETE STRUCTURES.
- PRESTRESSING STEEL: INITIAL TENSIONING LOAD = 28.75 K/STRAND
  DESIGN LOAD = 19.14 K/STRAND
- CONCRETE MUST ATTAIN 4000 P.S.I. COMPRESSIVE STRENGTH BEFORE THE PRESTRESSING FORCE IS TRANSFERRED.
- GALVANIZING SHALL BE IN ACCORDANCE WITH ASTM SPECIFICATION A 153.
- SHEAR KEYS AND BLOCKOUTS SHALL BE SANDBLAST ROUGHENED BY THE GIRDER FABRICATOR TO THE APPROVAL OF THE ENGINEER.
- RIBS AND CONNECTOR BOLT HOLES SHALL BE OMITTED ON OUTSIDE LEGS OF EXTERIOR GIRDERS.
- EXTERIOR GIRDER DIAPHRAGMS SHALL BE SPACED AT 13'-6 MAXIMUM.
- CONNECTOR BOLTS, WASHERS, HEX NUTS, JAM NUTS AND RODOFOAM GASKETS SHALL BE SUPPLIED WITH THE GIRDERS.

ERECTION:

- LIFTING FORCE AT EACH HOOK MUST BE VERTICAL AT ALL TIMES. GIRDER SURFACE MUST BE LEVEL AT ALL TIMES.

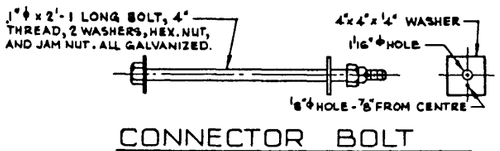

CONNECTOR BOLT
N.T.S.

CAMBER CORRECTION. VARY FROM 0" AT CENTRE TO 1¼" AT ENDS. CAMBER CORRECTION IS SUCH AS TO PRODUCE A GIRDER CAMBER EQUAL TO THE SPAN/1000 AND MAY BE VARIED TO SUIT GRADELINE.

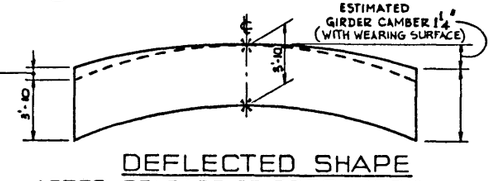

DEFLECTED SHAPE
AFTER RELEASE OF PRESTRESS
N.T.S.

NO.	DATE	DESCRIPTION	BY
5			
4			
3			
2			
1			

REVISIONS

APPROVED

CHIEF BRIDGE ENGINEER

DATE

PROVINCE OF ALBERTA
DEPARTMENT OF HIGHWAYS AND TRANSPORT
BRIDGE BRANCH

PRESTRESSED CONCRETE 100'-0 TYPE V.F - 46" GIRDER LIGHTWEIGHT CONCRETE

DESIGNED	DRAWN BY	DATE	CHECKED BY	DATE	STREAM	LOCATION	HWY. NO.	SCALE	FILE NO.	SHEET	DWG. NO.
R.G.Q.	V.G.B. W.J.S.	DEC. 1974						SHOWN		..... OF	S-1129

①