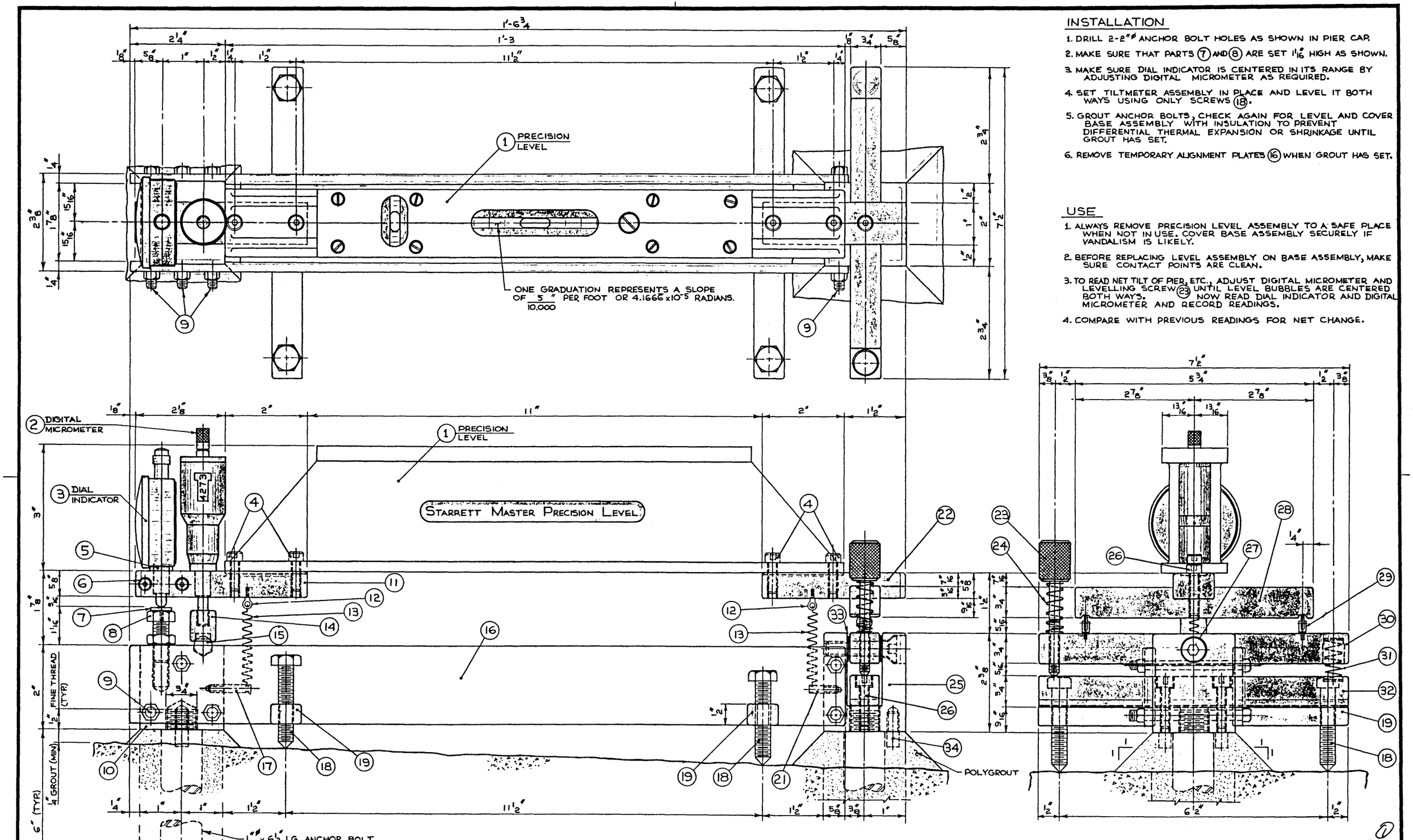

INSTALLATION

1. DRILL 2-2"ø ANCHOR BOLT HOLES AS SHOWN IN PIER CAP.
2. MAKE SURE THAT PARTS (7) AND (8) ARE SET 1 1/16" HIGH AS SHOWN.
3. MAKE SURE DIAL INDICATOR IS CENTERED IN ITS RANGE BY ADJUSTING DIGITAL MICROMETER AS REQUIRED.
4. SET TILTMETER ASSEMBLY IN PLACE AND LEVEL IT BOTH WAYS USING ONLY SCREWS (18).
5. GROUT ANCHOR BOLTS, CHECK AGAIN FOR LEVEL AND COVER BASE ASSEMBLY WITH INSULATION TO PREVENT DIFFERENTIAL THERMAL EXPANSION OR SHRINKAGE UNTIL GROUT HAS SET.
6. REMOVE TEMPORARY ALIGNMENT PLATES (16) WHEN GROUT HAS SET.

USE

1. ALWAYS REMOVE PRECISION LEVEL ASSEMBLY TO A SAFE PLACE WHEN NOT IN USE. COVER BASE ASSEMBLY SECURELY IF VANDALISM IS LIKELY.
2. BEFORE REPLACING LEVEL ASSEMBLY ON BASE ASSEMBLY, MAKE SURE CONTACT POINTS ARE CLEAN.
3. TO READ NET TILT OF PIER, ETC., ADJUST DIGITAL MICROMETER AND LEVELLING SCREW (23) UNTIL LEVEL BUBBLES ARE CENTERED BOTH WAYS. NOW READ DIAL INDICATOR AND DIGITAL MICROMETER AND RECORD READINGS.
4. COMPARE WITH PREVIOUS READINGS FOR NET CHANGE.

NO	DATE	DESCRIPTION
1		
2		
3		
4		
5		

REVISIONS

APPROVED

CHIEF BRIDGE ENGINEER

DATE

Alberta TRANSPORTATION BRIDGE BRANCH

PRECISION TILT-METER GENERAL ARRANGEMENT

DESIGNED	DRAWN BY	DATE	CHECKED BY	DATE	STREAM	LOCATION	HWY NO	SCALE	FILE NO	SHEET	DWG NO
C. W. PETERSON	WILF SCHNEIDER	NOV. '79						FULL		1 OF 3	S-1189