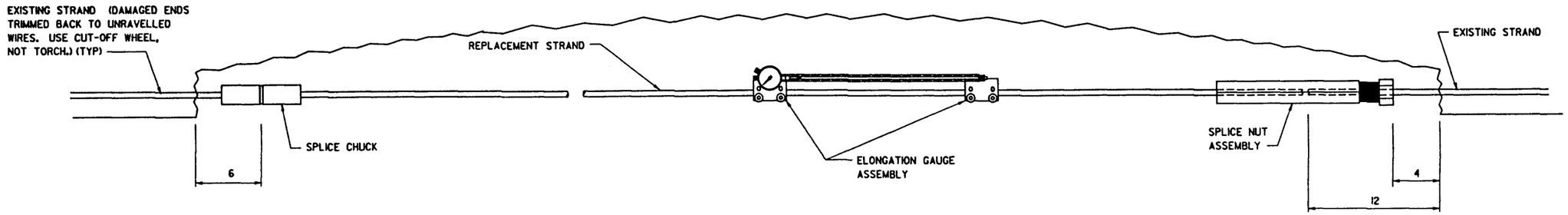

STRAND REPLACEMENT DIAGRAM

N T S

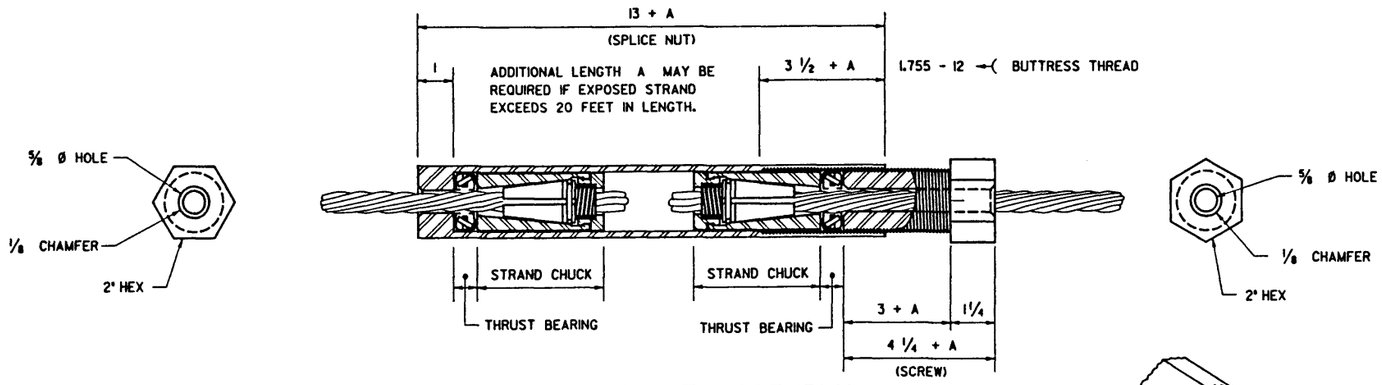

SPLICE NUT ASSEMBLY

1:2

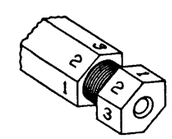

STAMP NUMBERS 1- 6 ON SIDES OF NUT AND SCREW AS SHOWN

GENERAL NOTES

- ALL DIMENSIONS ARE GIVEN IN INCHES
- SPLICE CHUCKS
  - SUPREME 660 XX - 1/2 TO 1/2 SPLICE CHUCKS
- SPLICE NUT ASSEMBLY
  - MATERIAL - 2" HEX ROD 4140 ANN.
    - OBTAIN MILL TEST FOR ACTUAL MATERIALS PURCHASED. REPORTED HEAT ANALYSIS (CHEMICAL COMPOSITION) TO BE USED TO DESIGN HEAT TREATMENT.
    - MATERIAL AS RECIEVED IS 70 000 PSI. HEAT TREAT TO RAISE YIELD TO 126 000 PSI (ROCKWELL C 29 - 30) PRIOR TO MACHINING TO AVOID DISTORTION.
    - BASIC MAJOR DIAMETER OF SCREW: 1.755 (+0,-.005)
    - BASIC MAJOR DIAMETER OF NUT: 1.655 (-0,+.005)
  - STRAND CHUCKS
    - SUPREME 630 XX - 1/2 MULTIPLE USE CHUCKS
    - TURN CHUCKS TO 1 3/16 OD
  - THRUST BEARINGS
    - TIMKIN T63
- ELONGATION GAUGE ASSEMBLY
  - CLAMP BLOCKS
    - 2 - 2 x 1/2 x 3 ALUMINUM
    - 1- 1/2 x 1/2 x 1 1/4 ALUMINUM
  - GAUGE
    - TECLOCK AI-921 (0.001- 1.000) (OR EQUAL)
- NOTES ON "+ A" DIMENSION
  - ANCHOR SET OF THE 4 CHUCKS WILL BE APPROXIMENTLY 1 INCH. REMOVAL OF THE SLACK IN THE SPLICE SET UP CAN EASILY USE ANOTHER INCH OF TRAVEL PRIOR TO THE LOAD ACTUALLY BEING APPLIED TO THE STRAND. IF THE LENGTH OF EXPOSED STRAND EXCEEDS 20 FEET, SOME ADDITIONAL MOVEMENT CAN BE BUILT IN TO THE DEVICE BY ADDING AN AMOUNT 'A' (SAY 1 TO 2 INCHES) TO THE DIMENSIONS SHOWN.
- SEE APPLICATION INSTRUCTIONS FOR DETAILED METHOD OF USE.

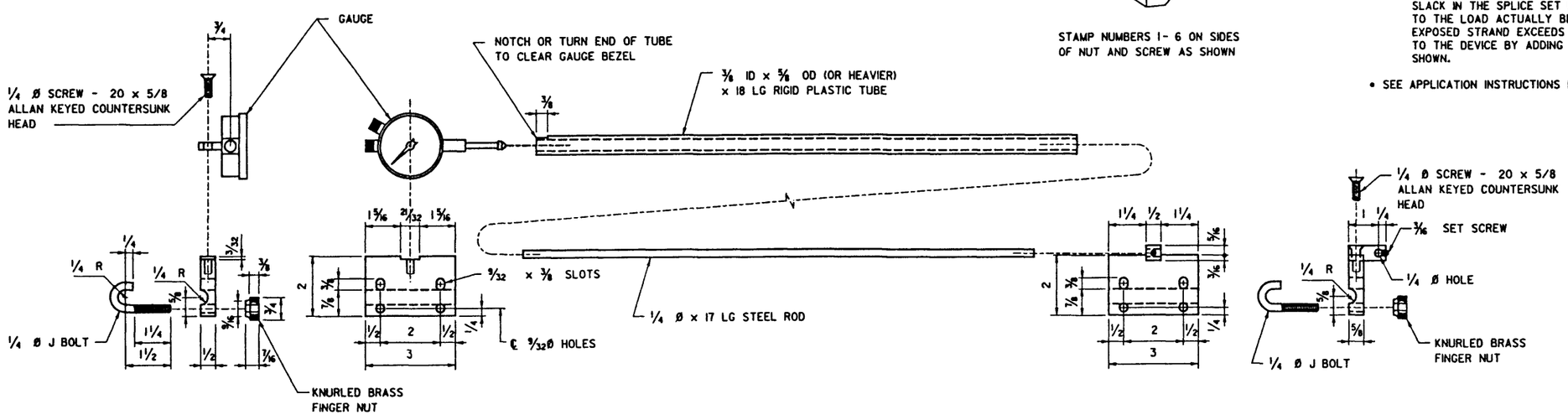

ELONGATION GAUGE ASSEMBLY

1:2

(1)

REV	DATE	DESCRIPTION	BY
6			
5			
4			
3			
2			
1			

REVISIONS

APPROVED

EXECUTIVE DIRECTOR BRIDGE ENGINEERING

DATE

Alberta TRANSPORTATION AND UTILITIES
BRIDGE ENGINEERING BRANCH

SELF STRESSING STRAND SPLICE FOR 1/2" Ø PRESTRESSING STRAND

DESIGNED	DRAWN	DATE	CHECKED	DATE	STREAM	LOCATION	HIGHWAY	FILE	SHEET	DRAWING
WJH	MIK	87-04-27						16	1 of 1	S-1195

PLOTTED AUG 11, 1987 GSA3:(150,12)B0001 6STD.DWG.1