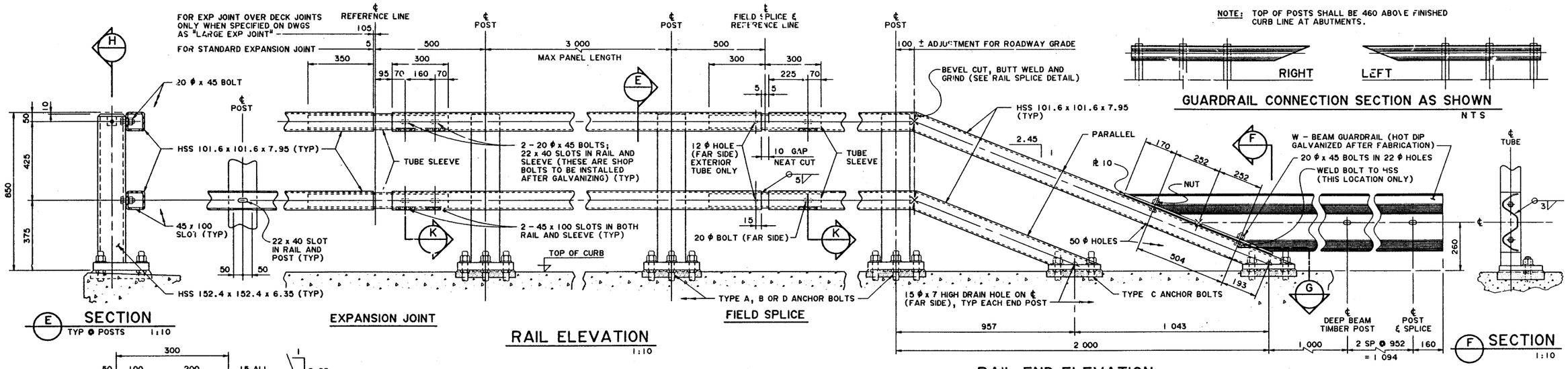

NOTE: TOP OF POSTS SHALL BE 460 ABOVE FINISHED CURB LINE AT ABUTMENTS.

GUARDRAIL CONNECTION SECTION AS SHOWN
NTS

E SECTION
TYP @ POSTS 1:10

EXPANSION JOINT

RAIL ELEVATION
1:10

FIELD SPLICE

RAIL END ELEVATION
1:10

F SECTION
1:10

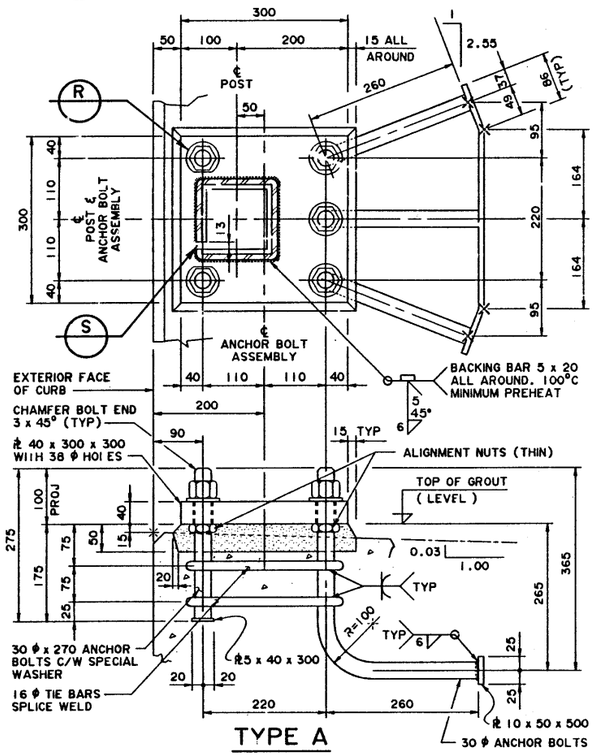

R TYPE A
1:5

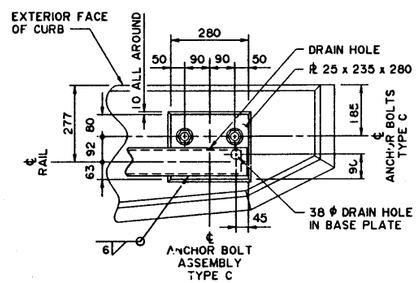

G SECTION
1:10

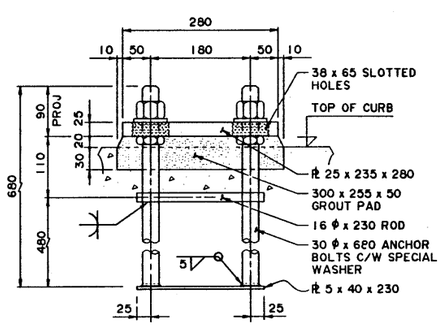

TYPE C
1:5

ANCHOR BOLT ASSEMBLIES

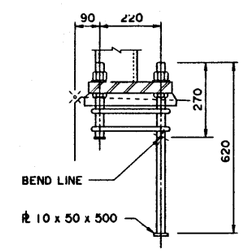

TYPE B
1:10

NOTE:
TYPE B AND D ANCHOR BOLTS SIMILAR TO TYPE A ANCHOR BOLTS EXCEPT AS SHOWN.

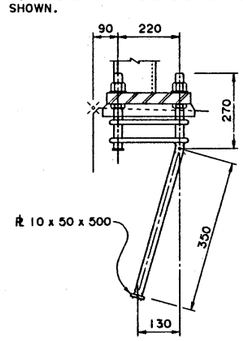

TYPE D
1:10

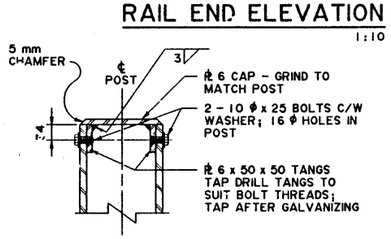

H SECTION - CAP
1:5

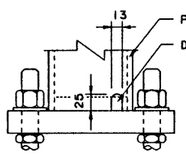

S DETAIL - DRAIN HOLE
NTS

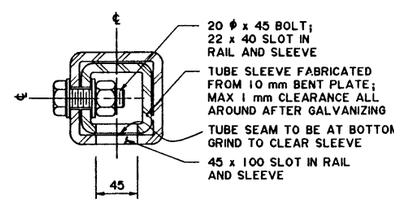

K SECTION - TUBE SLEEVE
NTS

GENERAL NOTES

1. ALL DIMENSIONS ARE IN MILLIMETRES EXCEPT AS OTHERWISE NOTED.
2. RAILING AND POST DESIGN MEETS CSA CAN3-S6-M78 FOR ROADWAY RAILING ON SAFETY CURB.

FABRICATION

1. BRIDGERAIL SHALL CONFORM TO THE CURRENT REQUIREMENTS OF THE SPECIFICATIONS FOR BRIDGE CONSTRUCTION SECTION 12 - BRIDGERAIL.
2. ALL PLATE STEEL SHALL CONFORM TO ASTM SPECIFICATION A36 OR CSA G40.21 GRADE 300W, EXCEPT STRUCTURAL TUBING SHALL CONFORM TO ASTM A500B. ANCHOR BOLTS SHALL CONFORM TO ASTM A307.
3. ANCHOR BOLTS SHALL BE 30 mm ϕ. EACH BOLT SHALL BE C/W HEX NUT, THIN NUT AND 6 mm THICK REGULAR OR SPECIAL WASHER AS NOTED, AND SHALL BE THREADED FOR 155 mm LENGTH. IF IMPERIAL SIZE ANCHOR BOLTS ARE PROVIDED, 1 1/8" ϕ SHALL BE USED IN LIEU OF 30 mm ϕ.
4. ALL BOLTED CONNECTIONS, EXCEPT AS NOTED, SHALL BE MADE WITH 20 mm ϕ HIGH TENSILE STRENGTH BOLTS, NUTS AND 2 HARDENED WASHERS CONFORMING TO ASTM SPECIFICATION A325 (3/4" ϕ BOLTS ARE ACCEPTABLE REPLACEMENTS FOR 20 mm ϕ).
5. ALL WELDING SHALL CONFORM TO CURRENT AWS SPECIFICATION D1.5.
6. BRIDGE SHALL BE CONSIDERED LEVEL FOR BRIDGERAIL FABRICATION UNLESS THE ROADWAY GRADE EXCEEDS 1%. ADJUSTMENT IF REQUIRED SHALL BE MADE BY VARYING THE 100 DIMENSION SHOWN ON "RAIL END ELEVATION".
7. POST BASE PLATE SHALL BE PLACED ON BEVEL IF ROADWAY GRADE EXCEEDS 2%.
8. TUBE SECTIONS SHALL BE FABRICATED IN THE CONFIGURATIONS SHOWN IN "TUBE SECTION TYPES".
9. POSTS SHALL BE FABRICATED WITH TUBE SEAM TO THE OUTSIDE.
10. ALL MATERIALS SHALL BE HOT-DIP GALVANIZED AFTER FABRICATION IN ACCORDANCE WITH THE FOLLOWING SPECIFICATIONS:
    - RAILING, POSTS, SLEEVES, CAPS AND GUARDRAIL - ASTM A123
    - ANCHOR BOLT ASSEMBLIES AND ALL CONNECTING HARDWARE - ASTM A153
11. THE BOTTOM SURFACE OF THE BASE PLATES SHALL BE COATED BY AN APPROVED COATING SYSTEM, SUITABLE FOR APPLICATION ON GALVANIZED STEEL, TO PREVENT CONTACT BETWEEN THE ZINC AND THE GROUT. THE COLOUR SHALL BE MEDIUM GREY.

ERECTION

1. TOP RAIL BOLTS MAY BE TIGHTENED FROM THE HEAD INSIDE THE POST. BOTTOM RAIL BOLTS MAY BE TIGHTENED THROUGH THE SLOT UNDER THE RAIL, USING A 15° ANGLED OR OFFSET BOX END WRENCH SUITABLY BENT AND EXTENDED TO ACHIEVE THE REQUIRED ½ TURN OF THE NUT FROM SNUG TIGHT.
2. ALL POSTS SHALL BE VERTICAL.
3. ALL DIMENSIONS ARE MEASURED PARALLEL TO TOP OF CURB AND ALONG CENTRELINE OF ANCHOR BOLT ASSEMBLIES.
4. LINE AND ELEVATION OF RAIL SHALL BE SET BY INSTRUMENT.

11

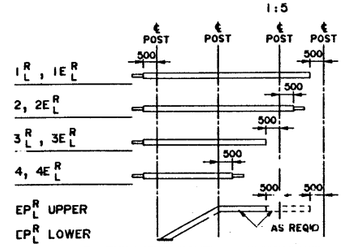

NOTE: E = EXPANSION PANEL AT SLEEVE END
EP = END POST

TUBE SECTION TYPES
(DIMENSIONS ARE TO REFERENCE LINES) NTS

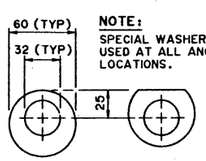

NOTE:
SPECIAL WASHERS MAY BE USED AT ALL ANCHOR BOLT LOCATIONS.

ECCENTRIC OR CLIPPED
(6 mm THICK)

R DETAIL - SPECIAL WASHER
1:2.5

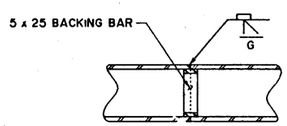

NOTE:
RAIL SPLICES IF REQUIRED SHALL CONFORM TO THE ABOVE DETAIL AND BE CLEAR OF JOINTS AND CONNECTIONS. NOT MORE THAN ONE SPLICE PER TUBE SECTION.

RAIL SHOP SPLICE
NTS

SUPERSEDED

REV	DATE	REVISIONS	BY
5			
4			
3			
2			
1	95-07-19	REDRAWN FROM S-1400-87 (REV 10)	LEA

APPROVED
EXECUTIVE DIRECTOR, BRIDGE ENGINEERING
DATE Aug 30/95

Alberta TRANSPORTATION AND UTILITIES
BRIDGE ENGINEERING BRANCH

850 mm DOUBLE TUBE TYPE BRIDGERAIL

DESIGNED	DRAWN	DATE	CHECKED	DATE	STREAM	LOCATION	HIGHWAY	FILE	SHEET OF	DRAWING
LEA	VMV	95-07-19								S-1400-95

FILE BBVMI
TIME 0930 HR
S1400X95.DGN DATE PLOTTED JUL 21, 1995

AT & U - RECORDS CENTRE
2398402