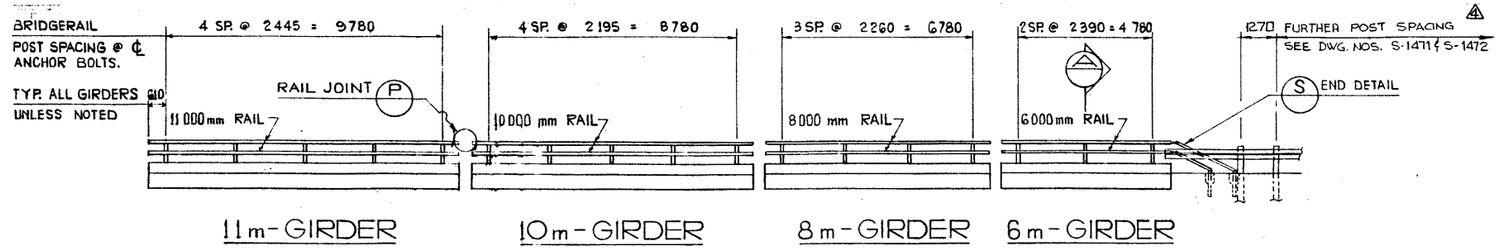

BRIDGERAIL POST LAYOUT ON INDIVIDUAL GIRDERS

N.T.S.

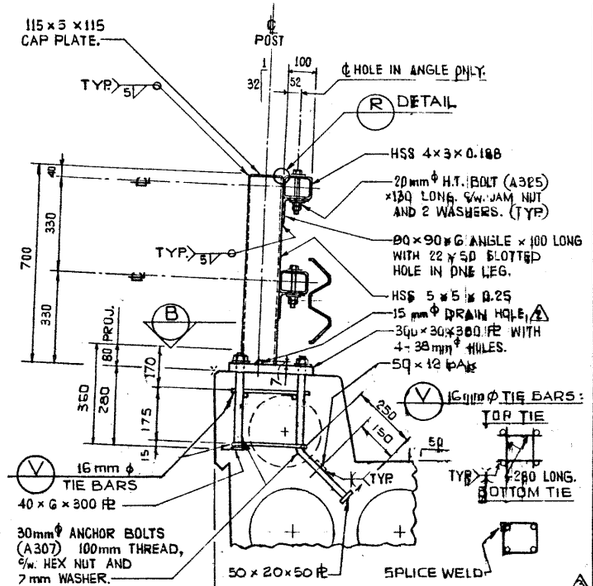

TYPICAL SECTION AT POSTS

1 : 10

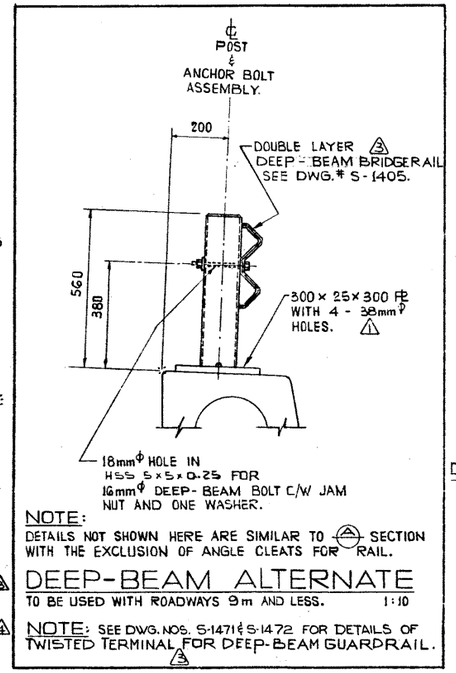

NOTE:
DETAILS NOT SHOWN HERE ARE SIMILAR TO (A) SECTION WITH THE EXCLUSION OF ANGLE CLEATS FOR RAIL.

DEEP-BEAM ALTERNATE

TO BE USED WITH ROADWAYS 9 m AND LESS. 1 : 10

NOTE: SEE DWG. NOS. S-1471 & S-1472 FOR DETAILS OF TWISTED TERMINAL FOR DEEP-BEAM GUARDRAIL.

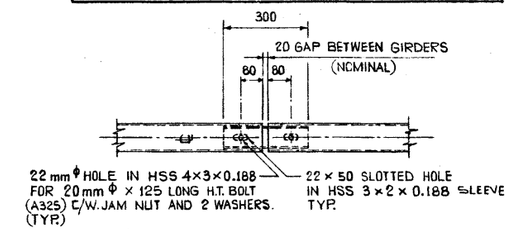

TYPICAL RAIL JOINT TOP VIEW

BETWEEN ALL GIRDERS. 1 : 10

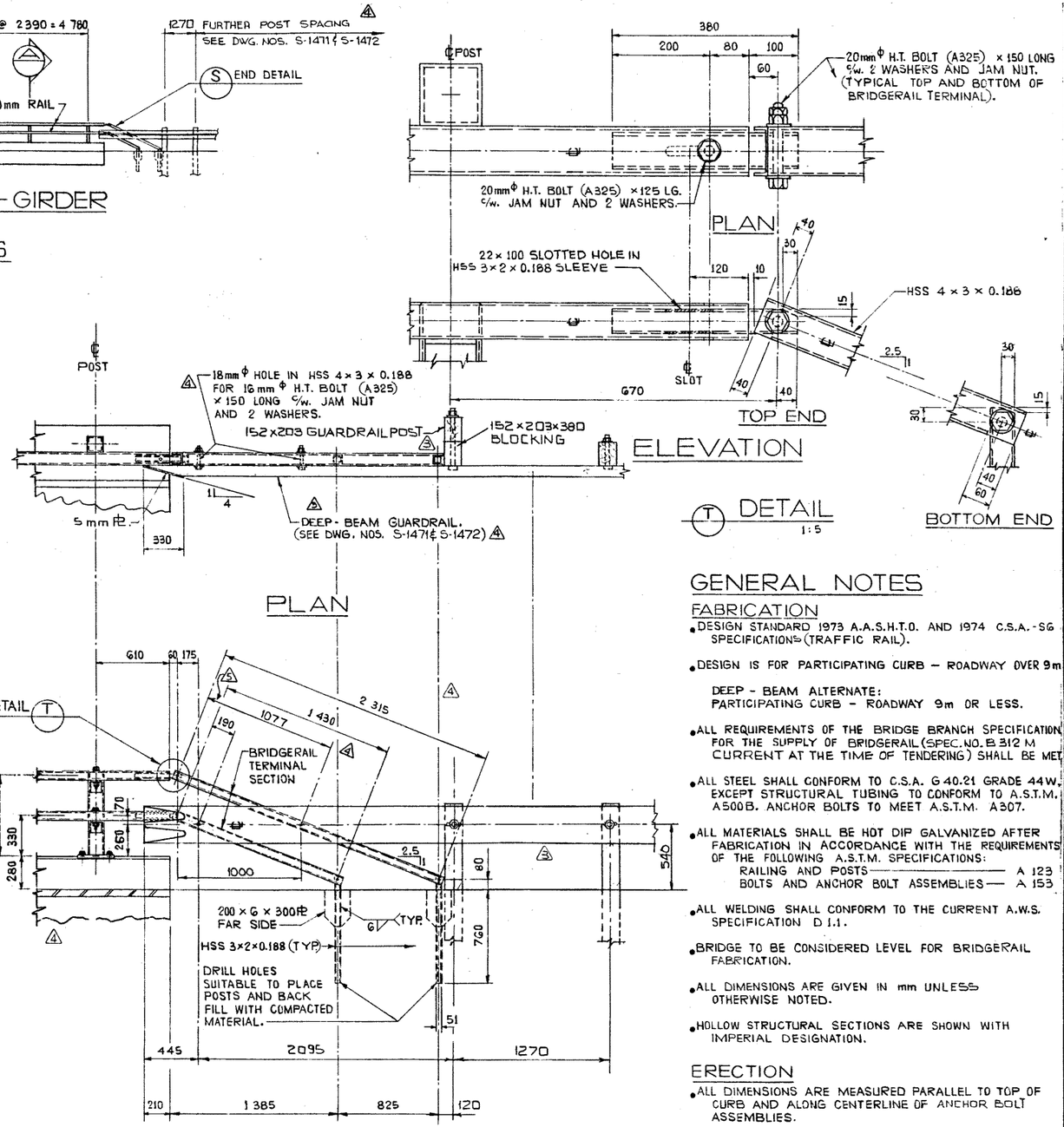

DETAIL

1 : 5

END DETAIL

1 : 20

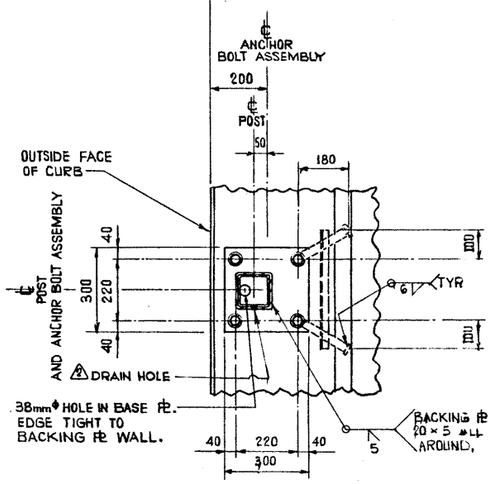

SECTION

1 : 10

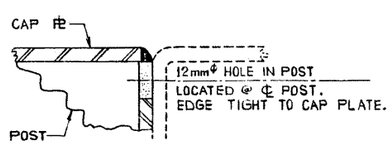

DETAIL

FULL SCALE.

GENERAL NOTES

FABRICATION

- DESIGN STANDARD 1973 A.A.S.H.T.O. AND 1974 C.S.A.-S6 SPECIFICATIONS (TRAFFIC RAIL).
- DESIGN IS FOR PARTICIPATING CURB – ROADWAY OVER 9 m

  DEEP - BEAM ALTERNATE:
  PARTICIPATING CURB - ROADWAY 9 m OR LESS.
- ALL REQUIREMENTS OF THE BRIDGE BRANCH SPECIFICATION FOR THE SUPPLY OF BRIDGERAIL (SPEC. NO. B 312 M CURRENT AT THE TIME OF TENDERING) SHALL BE MET.
- ALL STEEL SHALL CONFORM TO C.S.A. G 40.21 GRADE 44W, EXCEPT STRUCTURAL TUBING TO CONFORM TO A.S.T.M. A500B. ANCHOR BOLTS TO MEET A.S.T.M. A307.
- ALL MATERIALS SHALL BE HOT DIP GALVANIZED AFTER FABRICATION IN ACCORDANCE WITH THE REQUIREMENTS OF THE FOLLOWING A.S.T.M. SPECIFICATIONS:
  RAILING AND POSTS ——— A 123
  BOLTS AND ANCHOR BOLT ASSEMBLIES — A 153
- ALL WELDING SHALL CONFORM TO THE CURRENT A.W.S. SPECIFICATION D 1.1.
- BRIDGE TO BE CONSIDERED LEVEL FOR BRIDGERAIL FABRICATION.
- ALL DIMENSIONS ARE GIVEN IN mm UNLESS OTHERWISE NOTED.
- HOLLOW STRUCTURAL SECTIONS ARE SHOWN WITH IMPERIAL DESIGNATION.

ERECTION

- ALL DIMENSIONS ARE MEASURED PARALLEL TO TOP OF CURB AND ALONG CENTERLINE OF ANCHOR BOLT ASSEMBLIES.
- TIGHTENING OF RAIL BOLTS:
  ALL RAIL BOLTS ARE TO BE WRENCH TIGHT ONLY AND LOCKED WITH JAM NUT.

WORK WITH DWG'S.:
S-1471 & S-1472 DEEP-BEAM GUARDRAIL AT BRIDGE APPROACHES.
S - 1405 MULTILAYER DEEP-BEAM GUARDRAIL & BRIDGERAIL.

SUPERSEDED

SUPERSEDED

NO.	DATE	DESCRIPTION	BY
4	84-09-17	DIM. LINE CORRECTED-END DETAIL	J.C.Y.
3	84-06-21	NOTES REMOVED, BOLT ADDED, REFERENCE DWG. NO., & POST SPACING	J.C.Y.
2	83-09-20	POST SPACING	J.C.Y.
1	80-03-31	15 mm ϕ DRAIN HOLE ADDED	R.Q.
0	78 11 16	DIMENSION	R.Q.

REVISIONS

APPROVED — CHIEF BRIDGE ENGINEER — DATE MAY 23/78

Alberta TRANSPORTATION BRIDGE BRANCH — METRIC

700 mm TUBE TYPE BRIDGERAIL STANDARD SM BRIDGES

DESIGNED	DRAWN BY	DATE	CHECKED BY	DATE	STREAM	LOCATION	HWY. NO.	SCALE	FILE NO.	SHEET	DWG. NO.
D.K.D.	F.W. BUDA	77 07 29						SHOWN		...OF...	S-1402