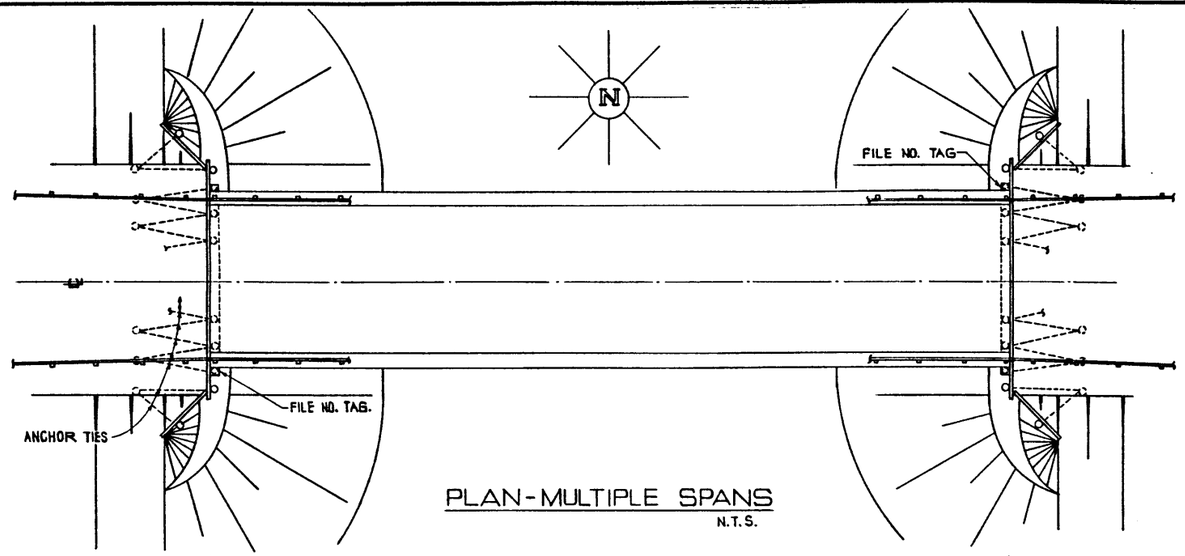

PLAN-MULTIPLE SPANS
N.T.S.

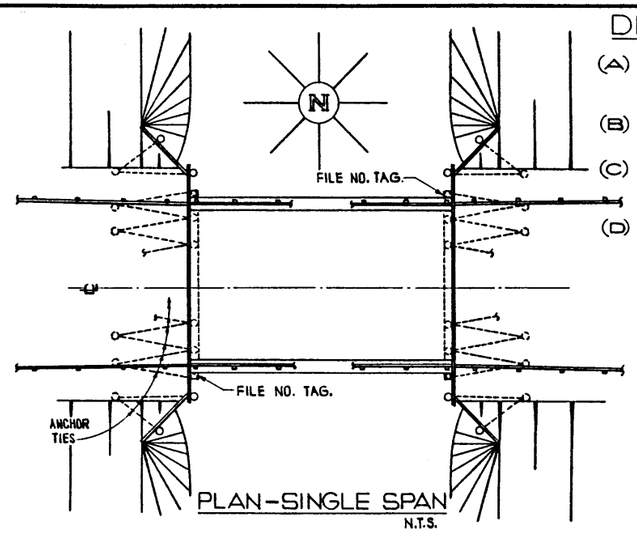

PLAN-SINGLE SPAN
N.T.S.

DIRECTIONS:

(A) SHOW POSITION OF LINE ON BOTH THE ELEVATION AND PLAN FOR EITHER TYPE OF SPAN. SHOW LINE LOCATION IN AREA OF ANCHOR TIES.

(B) SKETCH IN PIER LOCATIONS AND SHOW SPAN LENGTHS ON MULTIPLE SPAN ELEVATION.

(C) FILL IN BRIDGE FILE NO., LEGAL LOCATION, DESCRIPTIVE LOCATION ON SECTION PLAN, TYPE OF BRIDGE AND DATE CONDUIT TO BE INSTALLED.

(D) SHOW A DIRECTIONAL ARROW POINTING NORTH ON PLAN VIEW.

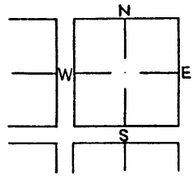

LOCATION: SEC.____ TP.____ R.____ MER.____

TYPE OF BRIDGE: _____

DATE ATTACHMENT TO BE INSTALLED: _____

BRIDGE FILE NO: _____

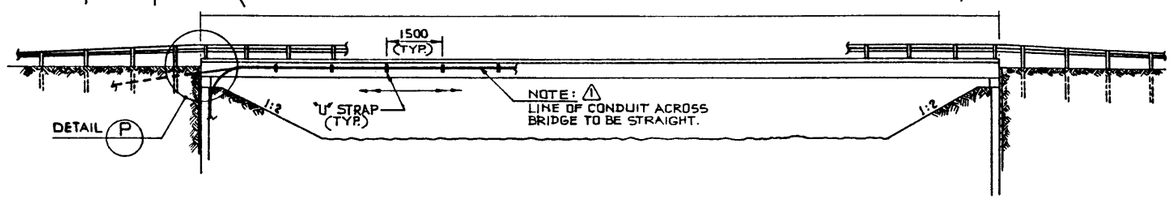

ELEVATION-MULTIPLE SPANS.
N.T.S.

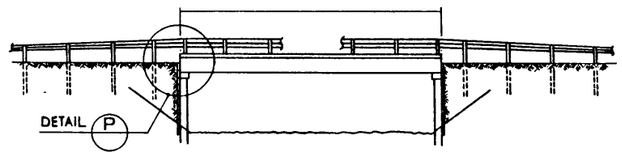

ELEVATION - SINGLE SPAN
N.T.S.

GENERAL NOTES:

- THIS DWG. IS METRIC AND ALL DIMENSIONS ARE SHOWN IN mm EXCEPT AS OTHERWISE NOTED.
- ⚠ THREE PRINTS OF A DRAWING DETAILING THE PROPOSAL ARE REQUIRED. ONE WILL BE RETURNED TO THE APPLICANT WITH COMMENTS OR APPROVAL. (THIS DRAWING IF NOT ALREADY COMPLETED, MAY BE COMPLETED BY THE APPLICANT AND SUBMITTED FOR APPROVAL – 3 COPIES REQ'D)
- ⚠ ALL METAL ATTACHMENTS ARE TO BE GALVANIZED.
- ⚠ EXPLOSIVE - DRIVEN ATTACHMENTS TO CONCRETE OR STEEL ARE NOT PERMITTED.
- ⚠ DRILLING INTO PRESTRESSED GIRDER LEGS IS NOT PERMITTED.
- THIS DWG. SHOWS THREE TYPICAL TYPES OF STANDARD BRIDGES. WHEN ATTACHING CONDUITS IT IS IMPORTANT TO DETERMINE WHICH TYPE OF BRIDGE YOU ARE DEALING WITH AND TO FOLLOW THE INSTRUCTIONS GIVEN FOR THAT TYPE.
- IF CONDUIT RUNS THROUGH TIMBER BACKWALL, SHEETING MUST BE DRILLED TO EXACT SIZE OF CONDUIT DIAMETER AND THE RESULTING HOLE CAREFULLY FIELD TREATED WITH BRUSH GRADE CREOSOTE. DRILLING IN ANY OTHER TIMBER MEMBERS IS NOT ALLOWABLE.
- EXCAVATION BEHIND BACKWALL MUST BE DONE BY HAND TO AVOID DAMAGE TO ANCHOR TIES.
- ANY MATERIAL EXCAVATED IN VICINITY OF BACKWALLS AND HEADSLOPES SHALL BE REPLACED USING GOOD BACKFILL PROCEDURES. MATERIAL SHALL BE WELL COMPACTED IN 150 mm LAYERS USING MECHANICAL TAMPERS.
- THE CABLE SHOULD BE KEPT AWAY FROM SHOULDER OF ROADWAY.

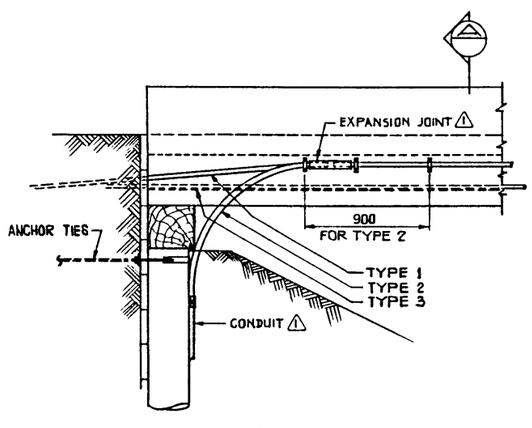

(P) DETAIL
1:20

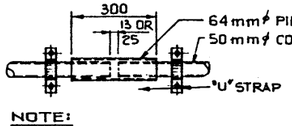

NOTE:
- USE ON ALL BRIDGES OF 30m OR MORE IN LENGTH.
- REAM CONDUIT ENDS AT JOINT TO ENSURE THERE ARE NO ROUGH EDGES.

EXPANSION JOINT DETAIL ⚠
1:20

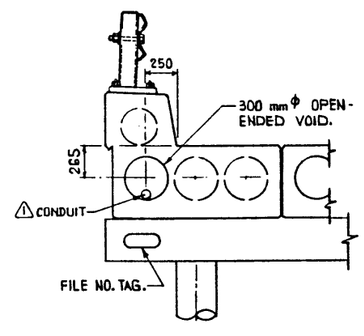

SM & VS TYPE GIRDER.
TYPE 3 ONLY.

ATTACHMENT INSTRUCTIONS

CONDUIT TO RUN THROUGH OPEN - ENDED VOID. DRILLING OF SM OR VS GIRDERS WILL NOT BE PERMITTED.

THIS SYSTEM TO BE USED FOR ALL VS GIRDERS BUILT AFTER LATE 1976. OLDER VS GIRDER BRIDGES DO NOT ALLOW FOR ATTACHMENT OF PHONE CONDUITS.

(A) SECTION
1:20

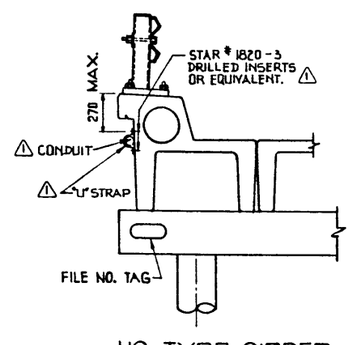

HC TYPE GIRDER
TYPE 1 OR TYPE 2.

ATTACHMENT INSTRUCTIONS

CONDUIT TO BE ATTACHED TO THIS GIRDER BY APPROVED CLAMPS AND DRILLED INSERTS AT A VERTICAL DISTANCE NOT TO EXCEDE 270 mm FROM THE TOP FACE OF THE CURB.

(A) SECTION
1:20

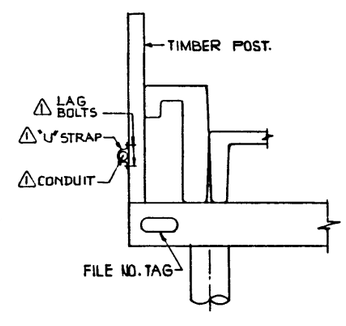

TIMBER POST AS SHOWN
TYPE 1 OR TYPE 2

ATTACHMENT INSTRUCTIONS

ON CONCRETE AND TIMBER BRIDGES WITH TIMBER POSTS THE CLAMPS MAY BE ATTACHED DIRECTLY TO THE TIMBER HANDRAIL POSTS WITH LAG BOLTS BELOW DECK ELEVATION.

(A) SECTION
1:20

NO.	DATE	DESCRIPTION	BY
⚠			
⚠			
⚠			
⚠			
⚠	1979 08 21	GENERAL	C.W.P.

REVISIONS

APPROVED
CHIEF BRIDGE ENGINEER
DATE FEB. 15/79.

Alberta TRANSPORTATION BRIDGE BRANCH METRIC

TELEPHONE LINE CONDUITS ON STANDARD BRIDGES

DESIGNED	DRAWN BY	DATE	CHECKED BY	DATE	STREAM	LOCATION	HWY. NO.	SCALE	FILE NO.	SHEET	DWG. NO.
R.G.Q.	F.W.B.	78 01 06						SHOWN		__ OF __	S-1427

1