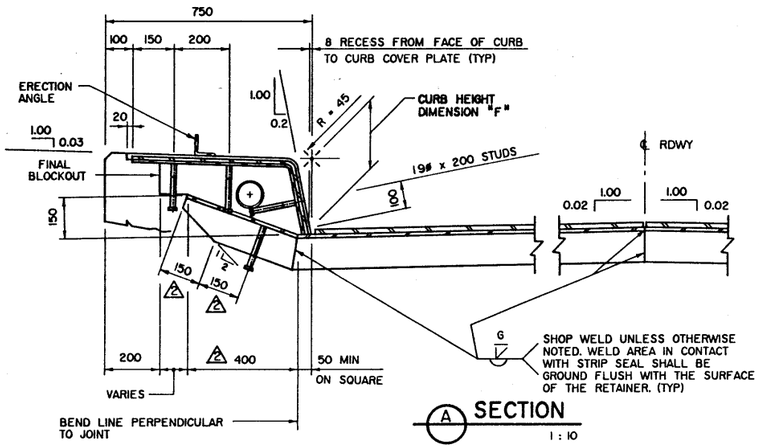

A SECTION
1 : 10

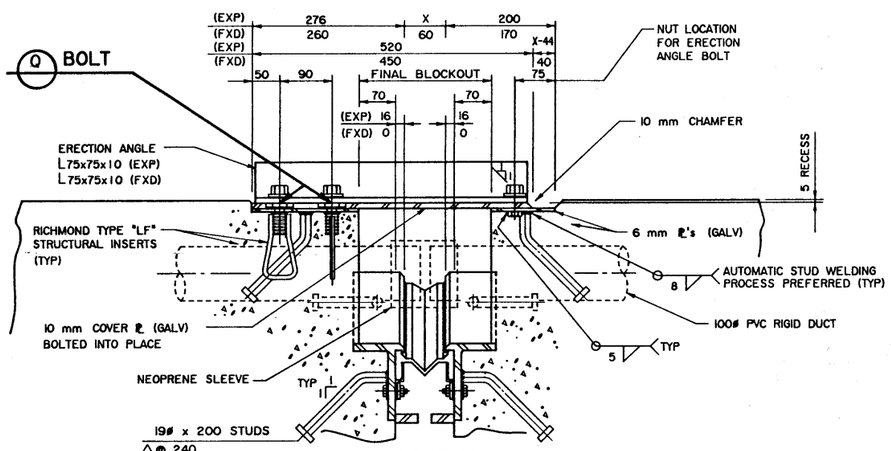

B SECTION
1 : 5

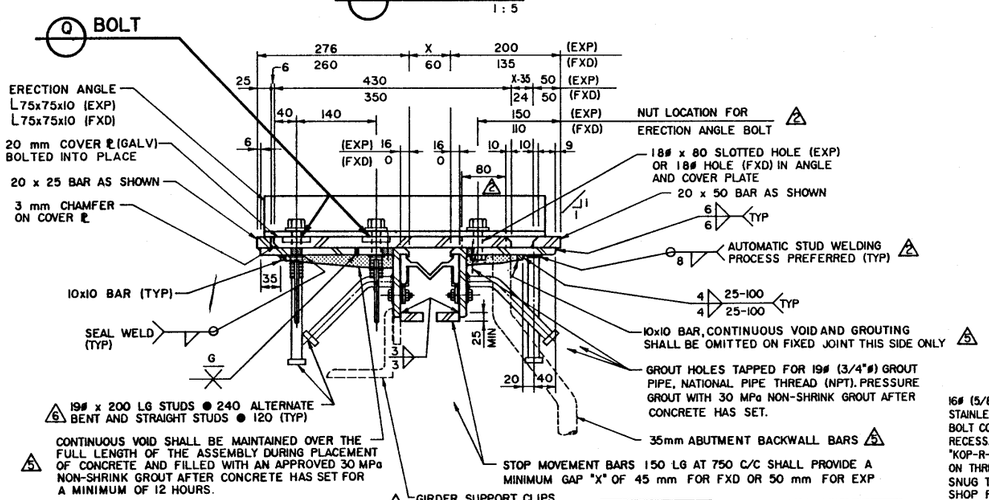

C SECTION
(EXP JOINT SHOWN) 1 : 5

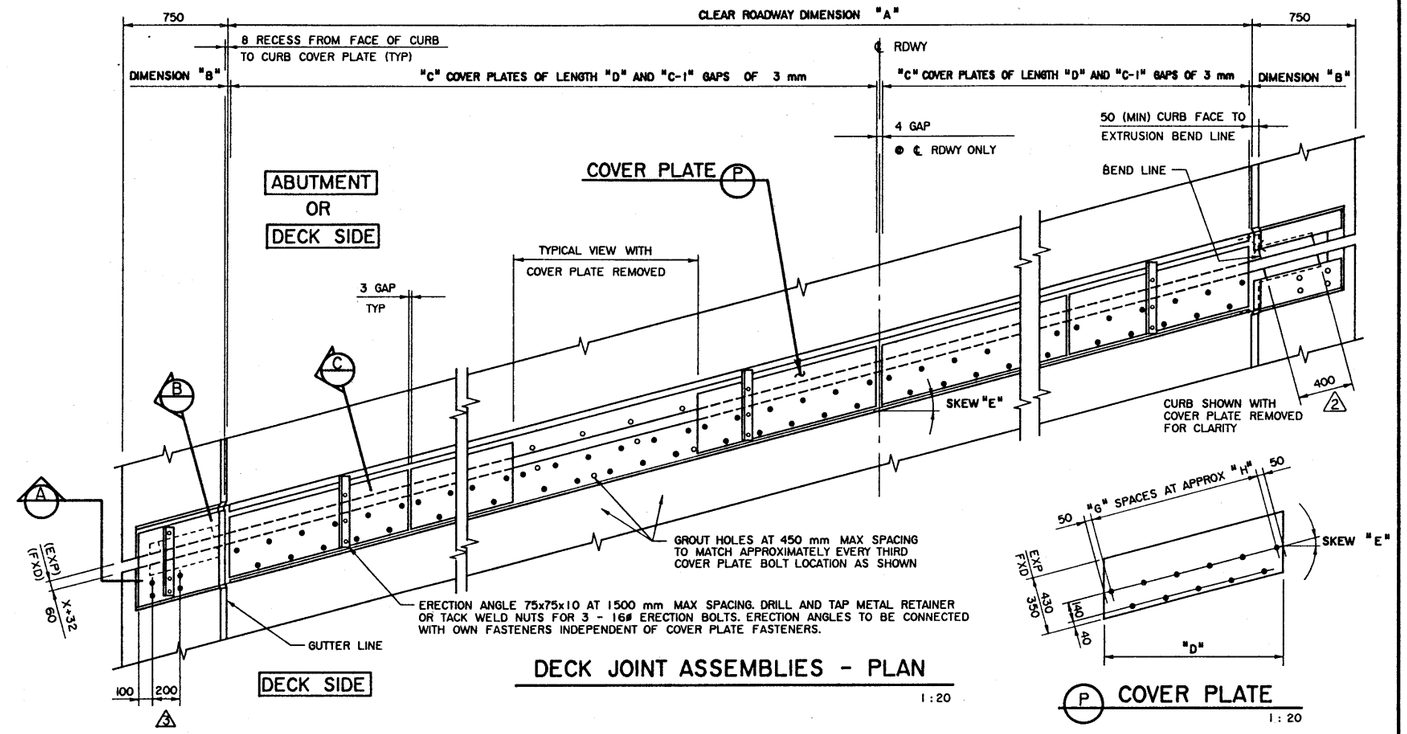

DECK JOINT ASSEMBLIES - PLAN
1 : 20

P COVER PLATE
1 : 20

4 GENERAL NOTES

- REFER TO CONTRACT DRAWINGS FOR DIMENSIONS "A" THROUGH "H" AND "X".
- ALL REQUIREMENTS OF THE CURRENT BRIDGE BRANCH SPECIFICATIONS FOR THE SUPPLY OF STRUCTURAL STEEL FOR BRIDGES (SPEC NO B-187M) SHALL BE MET.
- ALL STEEL SHALL CONFORM TO THE REQUIREMENTS OF CSA G40.21M-300W OR ASTM A36.
- ALL MATERIAL SHALL BE A MINIMUM OF 12 mm THICKNESS UNLESS NOTED OTHERWISE.
- ALL GALVANIZING SHALL MEET ASTM SPEC A123 OR A153 AS APPLICABLE.
- ZINC METALLIZING SHALL BE 180 MICRONS THICK AND IN ACCORDANCE WITH CSA G-189.
- ALL WELDING SHALL CONFORM TO AWS SPECIFICATION D1.1-86.

MATERIALS AND FABRICATION

- CONTINUOUS SEALING SYSTEM TO BE ONE OF THE FOLLOWING TYPES:

(EXP) — ELASTOMETAL PS-100 (SHOWN); HONEL 135.100; DURALOCK DL 110; GOODCO MAURER D125S (4)

(FXD) — ELASTOMETAL PS-75N; HONEL 133.75; DURALOCK DL75; GOODCO MAURER D80 N (4)

- METAL EXTRUSIONS SHALL BE SUPPLIED IN ONE PIECE UNLESS NOTED OTHERWISE, STRIP SEAL SHALL BE SUPPLIED IN ONE CONTINUOUS LENGTH.
- BOLTED COVER AND CURB PLATES SHALL BE HOT DIP GALVANIZED AFTER FABRICATION. ALL OTHER METAL PARTS EXCEPT ERECTION ANGLES AND STAINLESS STEEL BOLTS SHALL BE HOT DIP GALVANIZED OR ZINC METALLIZED AFTER FABRICATION.
- SHOP ASSEMBLE FOR INSPECTION IN A RELAXED CONDITION WITH ERECTON ANGLES REMOVED. APPROVAL OF ASSEMBLY REQUIRED PRIOR TO APPLICATION OF ERECTION ANGLES.
- JOINT SHALL BE SHOP ASSEMBLED AND TRANSPORTED WITH ERECTION ANGLES ATTACHED.

BY ERECTOR

1. CUT 35mm BACKWALL BARS TO THE REQUIRED ELEVATIONS SUCH THAT THE DECK JOINT ASSEMBLY WILL REST ON BARS AT THE CORRECT GRADE AND CROWN. SET ELEVATIONS BY INSTRUMENT. ERECT ASSEMBLY ONTO BACKWALL BARS. FOR STEEL GIRDERS ADJUST GIRDER SUPPORT CLIPS AS NECESSARY. MAINTAIN FACTORY GAP SETTING UNLESS ADVISED TO RESET GAP BY THE ENGINEER.
2. SECURE ROADWAY PORTION OF ASSEMBLY TO GIRDERS AND BACKWALL BY BOLTING/WELDING AS REQ'D. THE COVER PLATES MUST BE KEPT IN FULL BEARING ON BOTH SIDES OF THE ASSEMBLY. THE ATTACHMENT SHALL BE STRONG ENOUGH TO MAINTAIN THE CORRECT GAP, GRADE AND ALIGNMENT OF THE ASSEMBLY UNTIL AFTER CONCRETE PLACEMENT BY THE CONTRACTOR. ADDITIONAL SUPPORTS MAY BE REQUIRED TO ASSURE THESE CONDITIONS ARE MET.
3. REMOVE ERECTION ANGLES IMMEDIATELY AFTER ASSEMBLY IS SECURELY ATTACHED TO PREVENT DAMAGE OCCURRING DUE TO TEMPERATURE VARIATION.

BY CONTRACTOR

4. CHECK ASSEMBLY GRADE, ELEVATION AND COVER PLATE BEARING. NOTIFY ENGINEER OF ANY INCORRECT SETTINGS, ELEVATIONS OR ALIGNMENT. DO NOT PROCEED WITH CONCRETE PLACEMENT WITHOUT ENGINEERS APPROVAL.
5. PLACE CONCRETE AND MAINTAIN A CONTINUOUS VOID UNDER THE FULL LENGTH OF THE ASSEMBLY.
6. AFTER CONCRETE HAS SET A MINIMUM OF 12 HOURS, REMOVE COVER PLATES AND TEMPORARILY PLUG ALL GROUT HOLES.
7. (5) STARTING AT LOW END, PRESSURE GROUT HOLES USING 30 MPa NON-SHRINK GROUT, AS FOLLOWS:
   a) PLACE NOZZLE IN THE FIRST HOLE AND WITH ALL OTHER HOLES PLUGGED, DEVELOP FULL PUMP PRESSURE (MIN 400 kPa).
   b) OPEN THE SECOND HOLE AND ALLOW GROUT TO FLOW FREELY.
   c) OBSERVE GROUT AS IT FLOWS THROUGH HOLE. STOP PUMPING WHEN GROUT IS FREE OF ENTRAPPED AIR AND WATER.
   d) PLUG FIRST HOLE. PLACE NOZZLE IN SECOND HOLE, OPEN THIRD HOLE, AND REPEAT THIS PROCESS UNTIL THE FULL LENGTH IS GROUTED IN THIS PROGRESSIVE MANNER.
   e) FAILURE TO DEVELOP FULL PRESSURE INDICATES A LEAK. REMOVE ANY GROUT WHICH HAS SPILLED INTO EXPANSION GAP OR ONTO BRIDGE COMPONENTS.
8. REMOVE ALL FORMWORK AND PLUGS. CLEAN EXCESS CONCRETE AND DEBRIS FROM ASSEMBLY.
9. (5) INSTALL THE CURB PORTIONS OF THE DECK JOINT ASSEMBLY AND PLACE CONCRETE.

BY ERECTOR

10. REMOVE COVER PLATES WHEN JOINTS ARE READY FOR STRIP SEAL INSTALLATION. DECK JOINT SUPPLIER SHALL INSTALL SEAL AND COVER PLATES AND TORQUE BOLTS TO THE PROPER VALUE.

SUPERSEDED BY S-1448-92 (1) 92-01-31 (2) (3) (3A)

16# (5/8"#) TYPE 304 STAINLESS STEEL HEX HEAD BOLT COUNTERSUNK INTO 50# RECESS. INSTALL USING "KOP-R-KOTE" OR "NEVER SEEZ" ON THREADS AND UNDER HEADS. SNUG TIGHTEN BOLTS IN SHOP FOR TRANSPORTATION. FIELD TORQUE BOLTS TO 140 N-m AFTER STRIP SEAL IS INSTALLED.

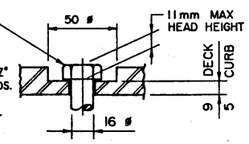

Q BOLT
REQ'D FOR DECK COVER PLATES (SHOWN) AND CURB COVER PLATES (SIMILAR)
1 : 2

REV	DATE	DESCRIPTION	BY
7	89-12-01	GOODCO MAURER SEAL ADDED	DBS
6	89-05-17	STUD SPACING	DBS
5	88-09-30	NOTES	DBS
4	88-09-16	GENERAL NOTES	DBS
3	88-07-11	RICHMOND "LF" INSERT DIMENSION	DBS
2	88-06-16	END TURN-UP DIM., SLOTTED HOLE IN ANGLE	DBS
1	88-02-22	REDRAWN FROM S-1448	DBS

REVISIONS

APPROVED
EXECUTIVE DIRECTOR BRIDGE ENGINEERING
DATE Sept 20, 1988

Alberta TRANSPORTATION
BRIDGE ENGINEERING BRANCH

COVER PLATED STRIP SEAL DECK JOINT

DESIGNED	DRAWN	DATE	CHECKED	DATE	STREAM	LOCATION	HIGHWAY	FILE	SHEET OF	DRAWING
DBS	WS	88-02-22								S-1448-88

AT & U - RECORDS CENTRE 2284279

PLOTTED FEB 22, 1988 QSA3:(150,4)S1448X88.DGN