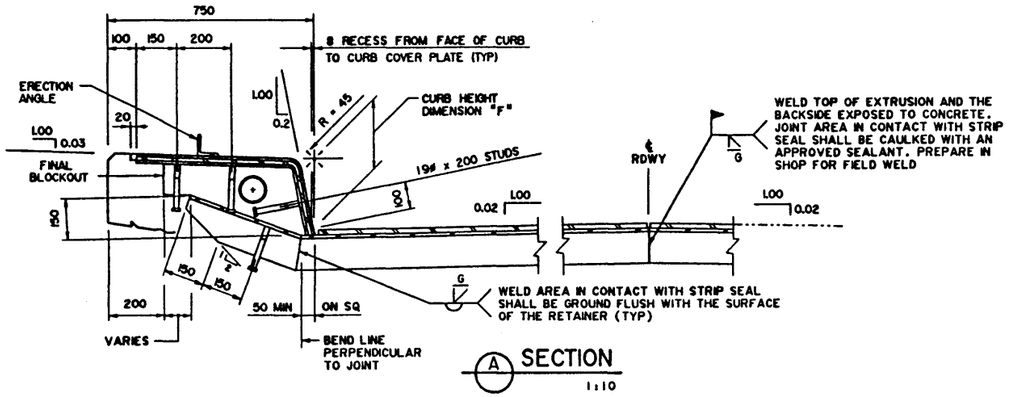

A SECTION
1:10

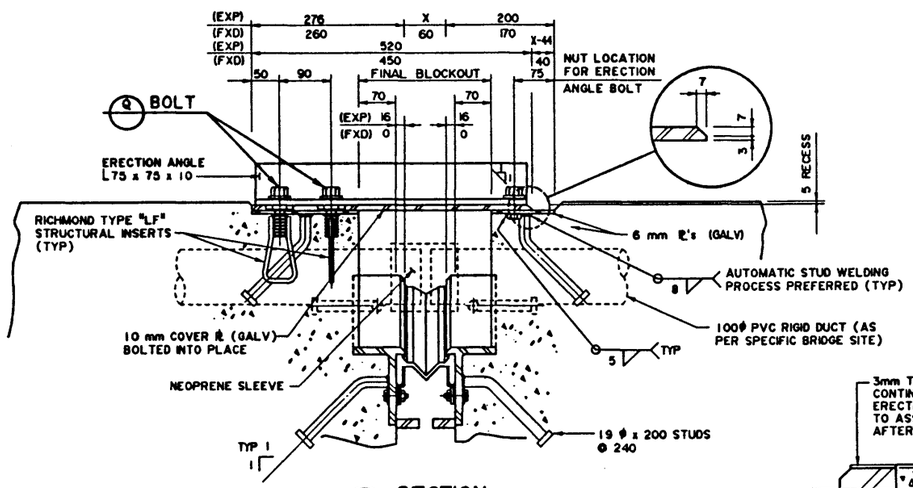

B SECTION
1:5

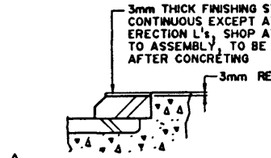

D FINISHING STRIP
1:2.5

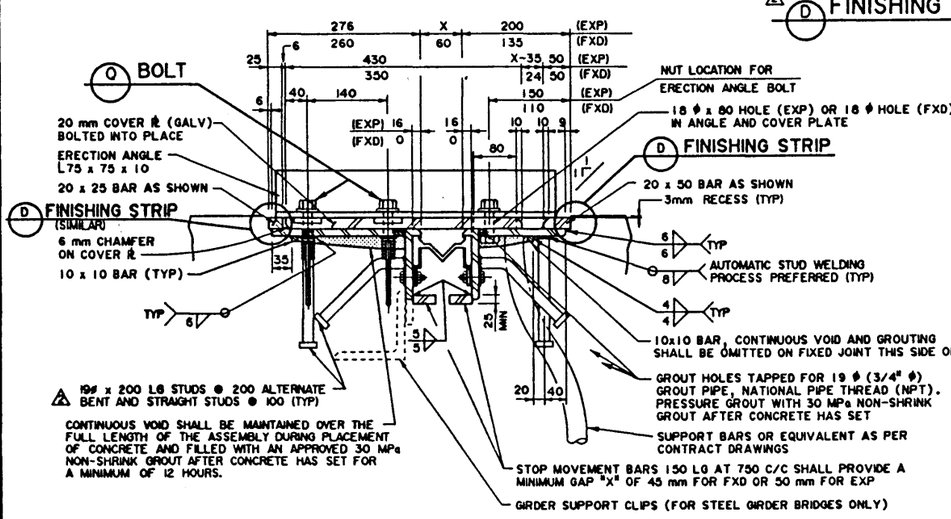

C SECTION
(EXP JOINT SHOWN) 1:5

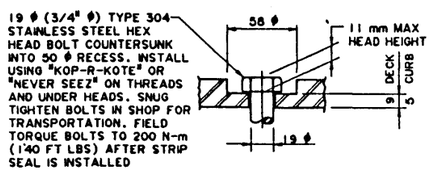

Q BOLT
REQ'D FOR DECK COVER PLATES (SHOWN) AND CURB COVER PLATES (SIMILAR)
1:2

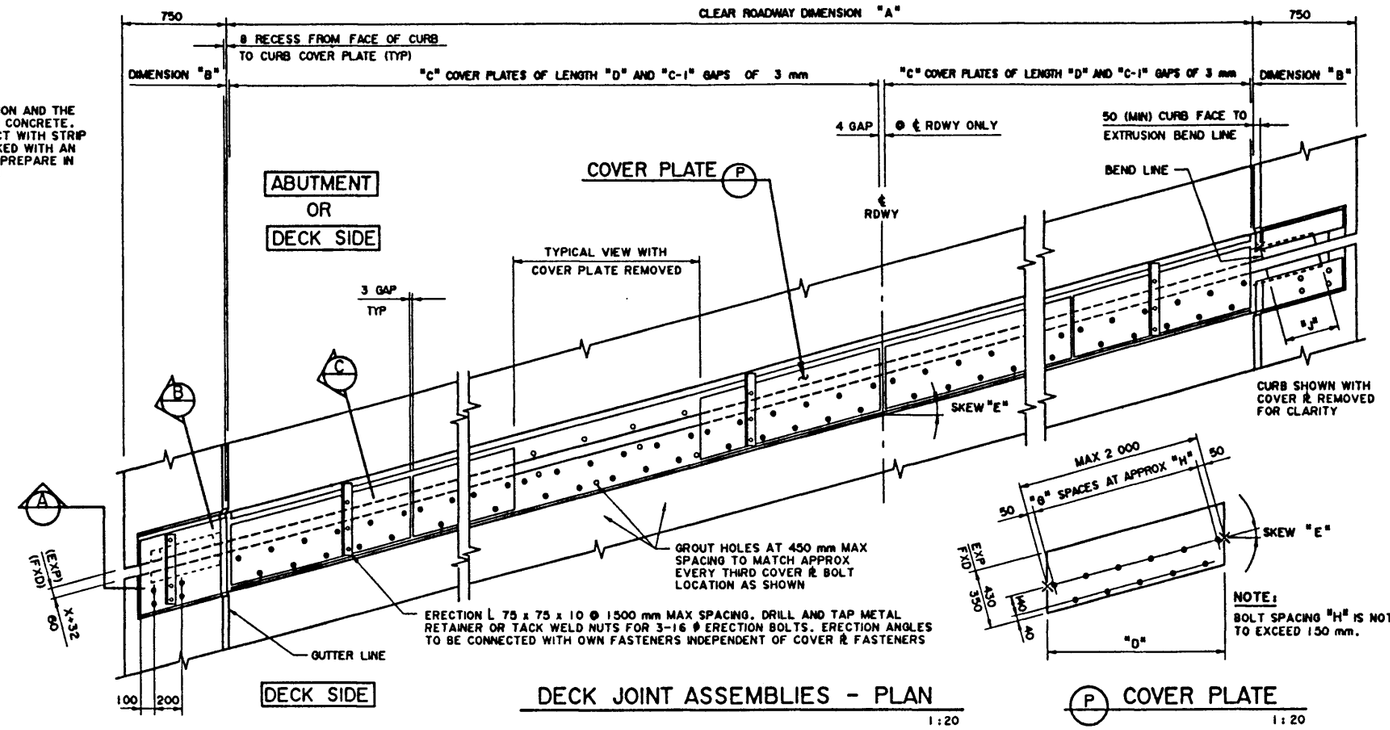

DECK JOINT ASSEMBLIES - PLAN
1:20

P COVER PLATE
1:20

NOTE:
BOLT SPACING "H" IS NOT TO EXCEED 150 mm.

GENERAL NOTES

- REFER TO CONTRACT DRAWINGS FOR DIMENSIONS "A" THROUGH "J" AND "X".
- DECK JOINT SHALL CONFORM TO THE CURRENT REQUIREMENTS OF THE BRIDGE CONSTRUCTION SPECIFICATIONS SECTION 6 - STRUCTURAL STEEL.
- ALL STEEL SHALL CONFORM TO THE REQUIREMENTS OF CSA G40.21M-300W.
- ALL MATERIAL SHALL BE A MINIMUM OF 12 mm THICKNESS UNLESS NOTED OTHERWISE.
- ALL GALVANIZING SHALL MEET ASTM SPEC A123 OR A153 AS APPLICABLE.
- ZINC METALLIZING SHALL BE 180 MICRONS THICK AND IN ACCORDANCE WITH CSA G-189.
- ALL WELDING SHALL CONFORM TO CURRENT AWS SPECIFICATION D1.5 .

MATERIALS AND FABRICATION

- CONTINUOUS SEALING SYSTEM TO BE ONE OF THE FOLLOWING TYPES:

(EXP)	(FXD)
ELASTOMETAL PS-100 (SHOWN)	ELASTOMETAL PS-75N
WERCHO 135.100	WERCHO 135.100
DS BROWN L-500	DS BROWN L-300

- METAL EXTRUSIONS SHALL BE SUPPLIED IN ONE PIECE UNLESS NOTED OTHERWISE. STRIP SEAL SHALL BE SUPPLIED IN ONE CONTINUOUS LENGTH.
- BOLTED COVER AND CURB PLATES SHALL BE HOT DIP GALVANIZED AFTER FABRICATION. ALL OTHER METAL PARTS EXCEPT ERECTION ANGLES AND STAINLESS STEEL BOLTS SHALL BE HOT DIP GALVANIZED OR ZINC METALLIZED AFTER FABRICATION.
- SHOP ASSEMBLE FOR INSPECTION IN A RELAXED CONDITION WITH ERECTON ANGLES REMOVED. APPROVAL OF ASSEMBLY REQUIRED PRIOR TO APPLICATION OF ERECTION ANGLES.
- JOINT SHALL BE SHOP ASSEMBLED AND TRANSPORTED WITH ERECTION ANGLES ATTACHED.

INSTALLATION PROCEDURE

- CUT SUPPORT BARS TO THE REQUIRED ELEVATIONS SUCH THAT THE DECK JOINT ASSEMBLY WILL REST ON BARS AT THE CORRECT GRADE AND CROWN. SET ELEVATIONS BY INSTRUMENT. ERECT ASSEMBLY ONTO SUPPORT BARS. FOR STEEL GIRDERS, ADJUST GIRDER SUPPORT CLIPS AS NECESSARY. MAINTAIN FACTORY GAP SETTING UNLESS ADVISED TO RESET GAP BY THE CONSULTANT.
- SECURE ROADWAY PORTION OF ASSEMBLY TO GIRDERS/DECK/BACKWALL BY BOLTING/WELDING. **THE COVER PLATES MUST BE KEPT IN FULL BEARING WITH THE BOTTOM PLATES AT ALL TIMES.** THE ATTACHMENT SHALL BE STRONG ENOUGH TO MAINTAIN THE CORRECT GAP, GRADE AND ALIGNMENT OF THE ASSEMBLY UNTIL AFTER CONCRETE PLACEMENT.
- AFTER ASSEMBLY IS SECURELY ATTACHED, LOOSEN BOLTS IN SLOTTED HOLES IN THE ERECTION ANGLES SUFFICIENTLY TO ALLOW TEMPERATURE MOVEMENT WITHOUT DAMAGING BRIDGE COMPONENTS. OBSERVE THAT CLAMPED PARTS DO NOT DEFORM WHEN BOLTS ARE LOOSENED.
- CHECK ASSEMBLY GRADE, ELEVATION AND COVER PLATE BEARING. PROCEED WITH CONCRETE PLACEMENT AFTER **APPROVAL BY CONSULTANT.**
- AFTER CONCRETE HAS SET FOR A MINIMUM OF 12 HOURS, REMOVE ERECTION ANGLES, FINISHING STRIPS, COVER PLATES AND TEMPORARILY PLUG ALL GROUT HOLES.
- STARTING AT LOW END, PRESSURE GROUT HOLES USING 30 MPa NON-SHRINK GROUT, AS FOLLOWS:
  - a) PLACE NOZZLE IN THE FIRST HOLE AND WITH ALL OTHER HOLES PLUGGED, DEVELOP FULL PUMP PRESSURE (MIN 400 KPa).
  - b) OPEN THE SECOND HOLE AND ALLOW GROUT TO FLOW FREELY.
  - c) OBSERVE GROUT AS IT FLOWS THROUGH HOLE. STOP PUMPING WHEN GROUT IS FREE OFEN TRAPPED AIR AND WATER.
  - d) PLUG FIRST HOLE. PLACE NOZZLE IN SECOND HOLE, OPEN THIRD HOLE AND REPEAT THIS PROCESS UNTIL THE FULL LENGTH IS GROUTED IN THIS PROGRESSIVE MANNER.
  - e) FAILURE TO DEVELOP FULL PRESSURE INDICATES A LEAK. REMOVE ANY GROUT WHICH HAS SPILLED INTO EXPANSION GAP OR ONTO BRIDGE COMPONENTS.
- REMOVE ALL FORMWORK AND PLUGS. CLEAN EXCESS CONCRETE AND DEBRIS FROM ASSEMBLY.
- INSTALL THE CURB PORTIONS OF THE DECK JOINT ASSEMBLY AND PLACE CONCRETE.
- REMOVE COVER PLATES WHEN JOINTS ARE READY FOR STRIP SEAL INSTALLATION. INSTALL SEAL AND COVER PLATES AND TORQUE BOLTS TO PROPER VALUE.

6

REV	DATE	REVISIONS	BY
7			
6			
5			
4			
3			
2	98-10-02	SECTION D ADDED, GENERAL UPDATE	
1	95-09-27	REDRAWN FROM S-1448-92 REV 1	LEA

APPROVED
ORIGINAL DRAWING APPROVED BY
D. DASMOHAPATRA
EXECUTIVE DIRECTOR BRIDGE ENGINEERING
NOVEMBER 9, 1995

Alberta TRANSPORTATION AND UTILITIES
BRIDGE ENGINEERING BRANCH

COVER PLATED STRIP SEAL DECK JOINT

DESIGNED	DRAWN	DATE	CHECKED	DATE	STREAM	LOCATION	HIGHWAY	FILE	SHEET	DRAWING
LEA	WS VMV	95-09-27	KST	95-10-06					OF	S-1448-95

DRAWING REDUCED TO 24X34 DO NOT SCALE