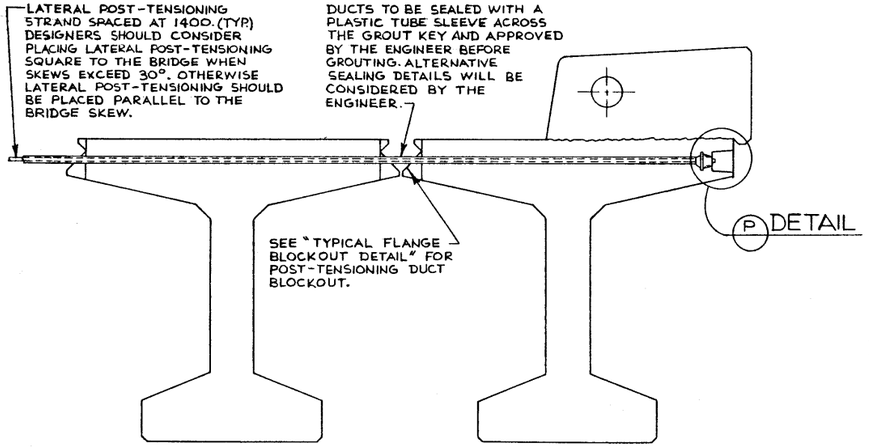

LATERAL POST-TENSIONING

1:10

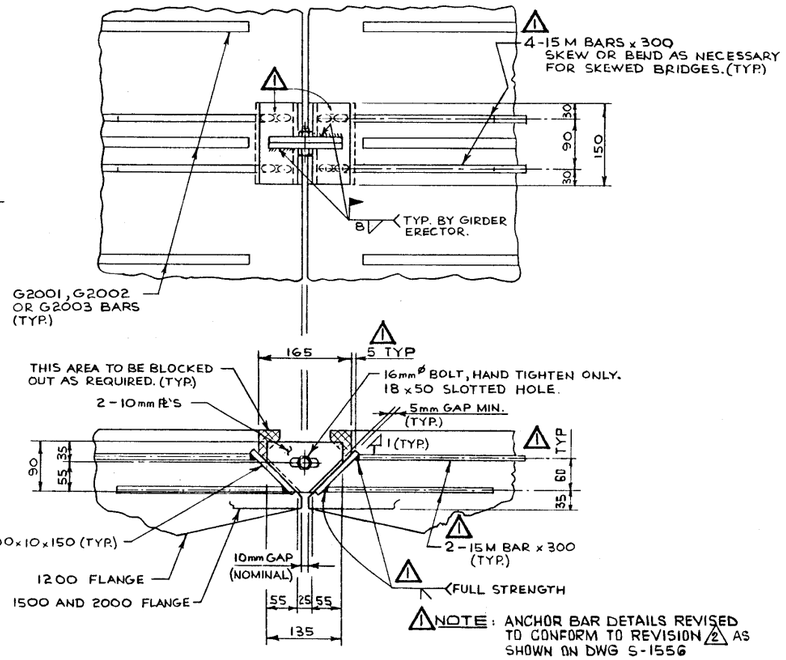

TYPICAL CAMBER CORRECTION DETAIL

4 REQ'D FOR INTERIOR GIRDER
2 REQ'D FOR CURB GIRDER

1:5

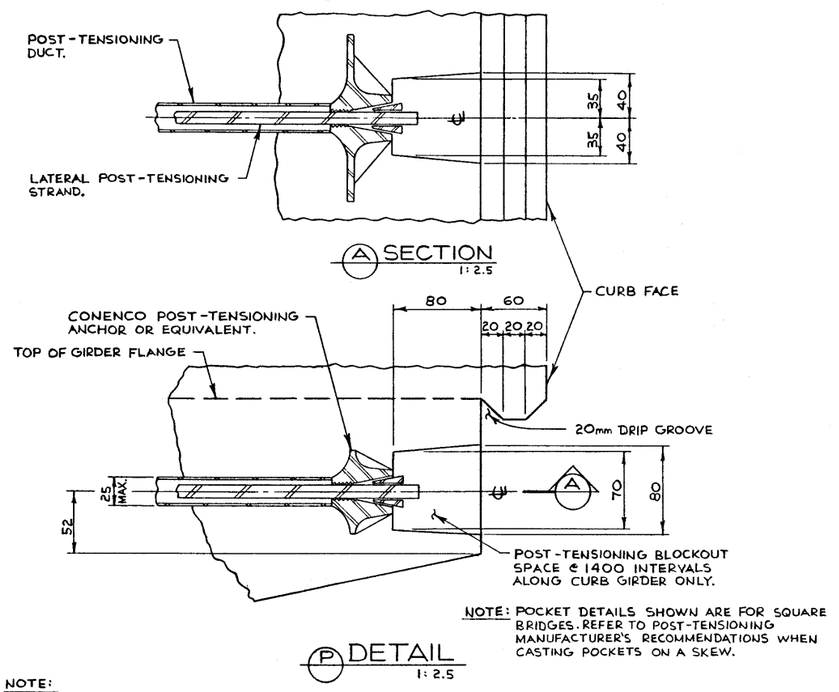

NOTE: POCKET DETAILS SHOWN ARE FOR SQUARE BRIDGES. REFER TO POST-TENSIONING MANUFACTURER'S RECOMMENDATIONS WHEN CASTING POCKETS ON A SKEW.

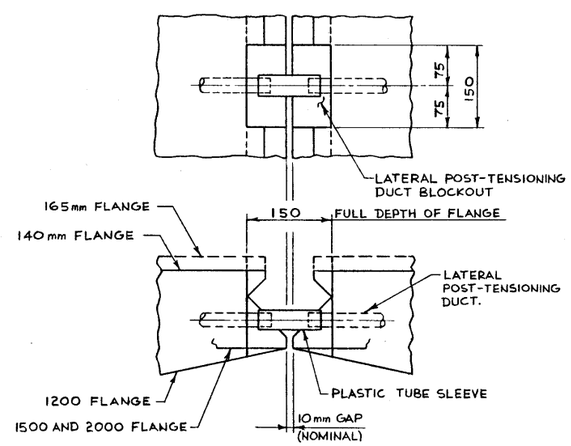

TYPICAL FLANGE BLOCKOUT DETAIL

1:5

NOTE:
G1506 AND G1507 BARS FOR ALL FLANGE WIDTHS MAY REQUIRE SKEW BENDING OF DECK HOOK PORTION OF BAR TO SUIT SKEW OF POST-TENSIONING DUCTS.

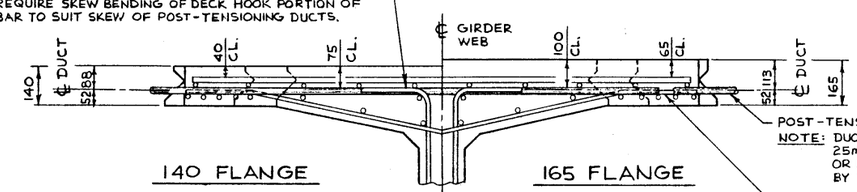

NOTE: DUCT IS TO BE NO GREATER IN THE VERTICAL DIMENSION THAN 25mm IN ORDER TO FIT BETWEEN THE REINFORCING MATS. OVAL OR RECTANGULAR DUCTS WILL BE ACCEPTABLE FOR APPROVAL BY THE ENGINEER.

NOTE: END CANTILEVERS OF G1503 BARS IN 2000mm FLANGES MAY REQUIRE SKEW BENDING TO SUIT SKEW OF POST-TENSIONING DUCTS. SUPPLEMENT WITH ADDITIONAL G1503 BAR EITHER SIDE OF SKEW BENT G1503.

TYPICAL FLANGE DETAIL

(2000 FLANGE SHOWN)

1:10

GENERAL NOTES

LATERAL POST-TENSIONING NOTES

- GIRDER ERECTOR IS RESPONSIBLE FOR THE LATERAL STRESSING OF THE DECK UNLESS NOTED OTHERWISE.
- ANCHORAGE DETAILS SHOWN FOR LATERAL STRESSING CONFORM TO THE "CONENCO 17-5" SYSTEM. ALTERNATE ARRANGEMENTS MUST BE APPROVED BY THE ENGINEER.
- LATERAL POST-TENSIONING STRAND SHALL BE 12.7 mm ø - 7 WIRE LOW RELAXATION STRAND. STRAND FORCE SHALL BE 137 kN AFTER IMMEDIATE SEATING LOSSES HAVE OCCURED IN THE ANCHORAGES.
- DUCTS USED FOR LATERAL STRESSING SHALL HAVE A MAXIMUM VERTICAL DIMENSION OF 25 mm AND A MAXIMUM HORIZONTAL DIMENSION OF 75 mm. DUCTS USED SHALL NOT EXCEED THE FOLLOWING MAXIMUM DESIGN FRICTION AND WOBBLE VALUES: $K = 0.0033/M$ $\mu = 0.2$.

SEQUENCE OF CONSTRUCTION

- DIFFERENTIAL CAMBER BETWEEN ADJACENT UNITS SHALL BE ELIMINATED PRIOR TO THE INSTALLATION OF THE LATERAL STRESSING STRAND.
- FIELD CASTING OF DIAPHRAGMS SHALL BE COMPLETED.
- TIGHT FITTING SLEEVES ARE TO BE INSTALLED AT SHEAR KEYS TO ENSURE CONTINUITY OF THE SEALED DUCTS.
- SHEAR KEYS SHALL BE PLACED AND BE ALLOWED TO REACH A MINIMUM COMPRESSIVE STRENGTH OF 28 MPa PRIOR TO TENSIONING.
- THE FIELD STRESSING ARRANGEMENT SHALL BE SUBMITTED TO THE ENGINEER FOR APPROVAL PRIOR TO ANY SUCH WORK COMMENCING.
- AFTER TENSIONING, THE DUCTS SHALL BE FILLED WITH AN APPROVED GROUT COMPOUND UNDER PRESSURE WITHIN 24 HOURS. MINIMUM GROUT STRENGTH TO BE 30MPa AT 28 DAYS.
- ANCHORAGE POCKETS IN EXTERIOR GIRDERS ARE TO BE PATCHED BY THE ERECTOR WITH NON-SHRINK, NON-STAINING GROUT. CLASS 5 FINISH SHALL BE FIELD APPLIED TO ALL EXTERIOR GIRDERS.

SUPERSEDED 1 2 3

SUPERSEDED

BY S-1591
SHEET 2
90-11-28

1 2 3

NO	DATE	DESCRIPTION	
1			
2			
3			
4			
5			
6	85-06-19	CAMBER CORRECTION DETAIL	BLC

REVISIONS

APPROVED
CHIEF BRIDGE ENGINEER
DATE FEB 06 1986

Alberta TRANSPORTATION BRIDGE AND STRUCTURAL ENGINEERING BRANCH — METRIC

DECK BULB TEE LATERAL POST-TENSIONING DETAILS

DESIGNED	DRAWN BY	DATE	CHECKED BY	DATE	STREAM	LOCATION	HWY NO	SCALE	FILE NO	SHEET	OF	DWG NO
B.L.C.	W.S.	83-12-01						SHOWN				S-1558

AT & U - RECORDS CENTRE 1224189