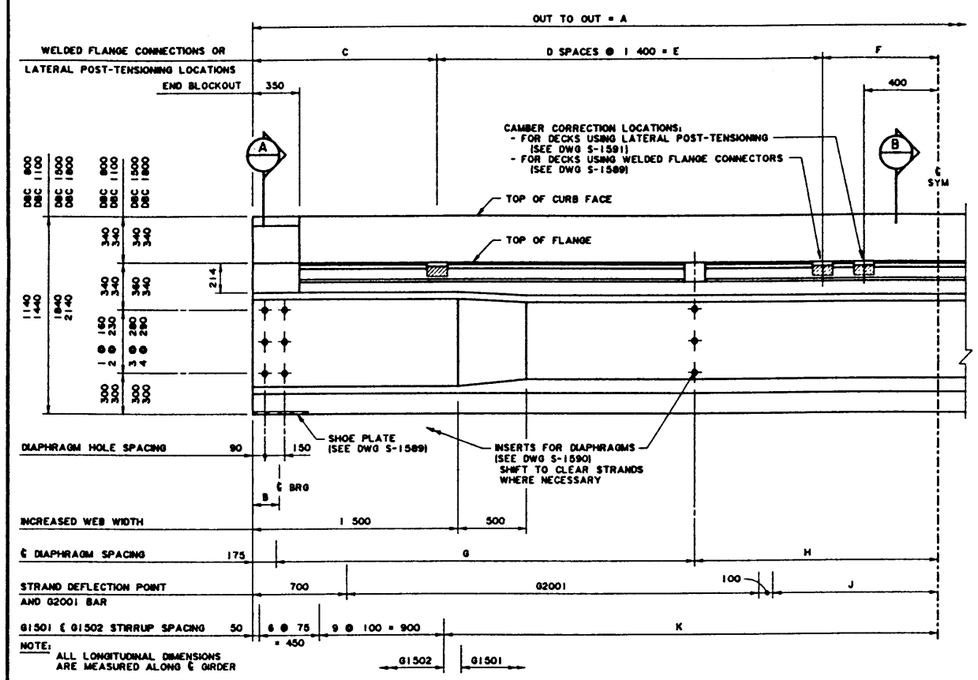

ELEVATION

1:20

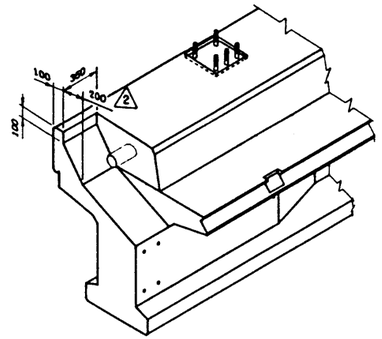

END BLOCKOUT DETAIL

1:20

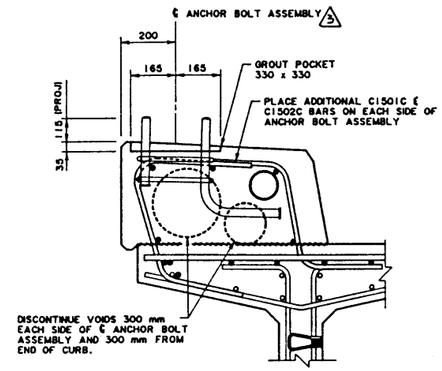

ANCHOR BOLT DETAIL

1:10

BAR LIST: TYPICAL SQUARE GIRDER						
MARK	SIZE	TYPE	GIRDER DEPTH	X	Y	LENGTH
C1501C	15	F	ALL			1 200
C1502C	15	G	ALL			1 130
C1503C	15	STR	ALL			
D1501	15	A	ALL			1130
G1501	15	C	800	700		1 650
			1 100	1 000		1 950
			1 500	1 400		2 350
			1 800	1 700		2 650
G1502	15	D	800	700		1 640
			1 100	1 000		1 940
			1 500	1 400		2 340
			1 800	1 700		2 640
G1503C	15	E	ALL			2 730
G1504	15	STR	ALL			
G1505C	15	STR	ALL			
G2001C	20	STR	ALL			1 000
G2001	20	STR	ALL			
G2002	20	STR	800			520
			1 100			820
			1 500			1 220
			1 800			1 520
G2003	20	STR	ALL			

BAR TYPES

(ALL BAR DIMENSIONS ARE OUT TO OUT)

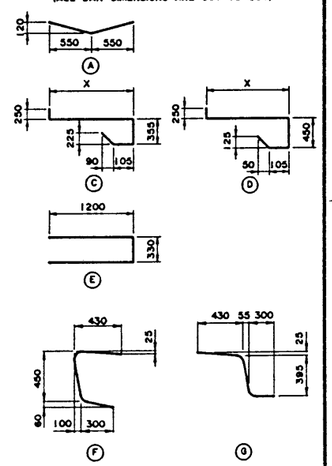

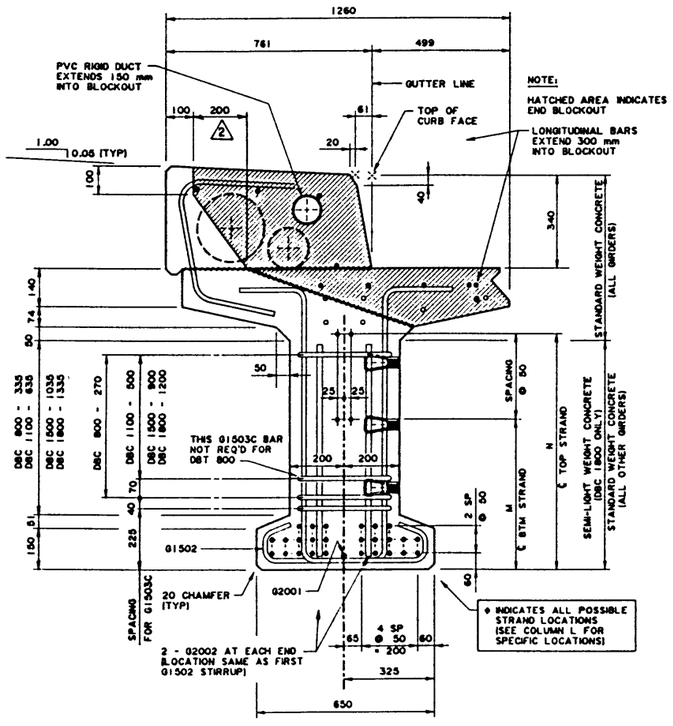

A END SECTION

1:10

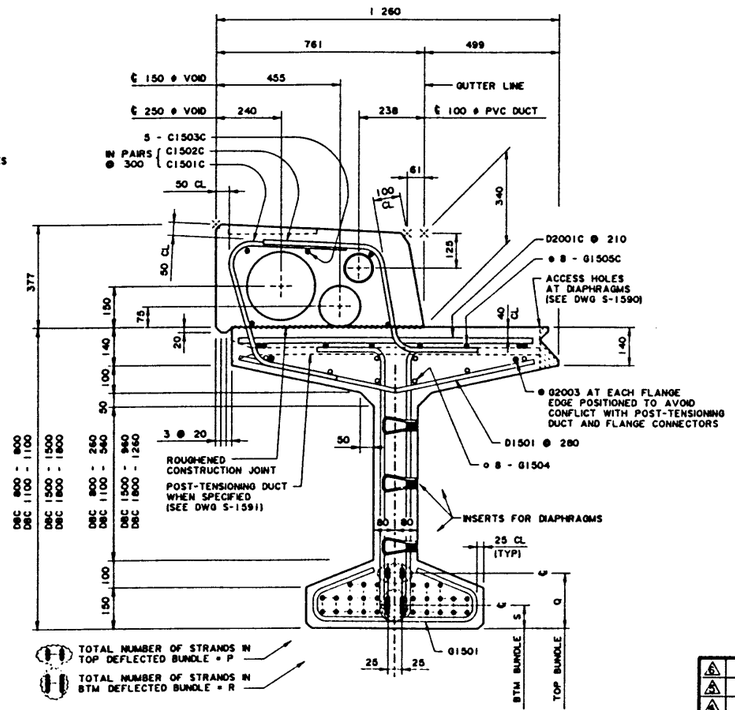

B TYPICAL SECTION

1:10

SHOWS MIDSPAN STRAND PATTERN

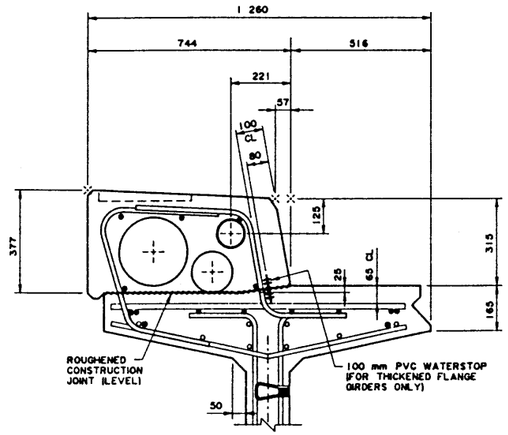

THICKENED FLANGE DETAIL

TYPICAL SECTION EXCEPT AS SHOWN 1:10

DBC 1100 SHOWN

SHEET 4

REV	DATE	DESCRIPTION	BY
6			
5			
4			
3	92-05-20	SUPPLY NOTE REMOVED-ANCHOR BOLT DET.	TL
2	92-03-03	END BLOCKOUT DIMENSION ADDED	TL
1	90-11-05	REDRAWN FROM DWG S-1554	TL

REVISIONS

APPROVED

EXECUTIVE DIRECTOR BRIDGE ENGINEERING

DATE 91-03-07

Alberta TRANSPORTATION AND UTILITIES
BRIDGE ENGINEERING BRANCH

STANDARD DBC SERIES
CURB GIRDER - SHEET 1 OF 2

DESIGNED	DRAWN	DATE	CHECKED	DATE	STREAM	LOCATION	HIGHWAY	FILE	SHEET	DRAWING
TL	MIK	90-11-05							OF	S-1592

MAR 05, 1991 88NES-S-S92A90.DWG