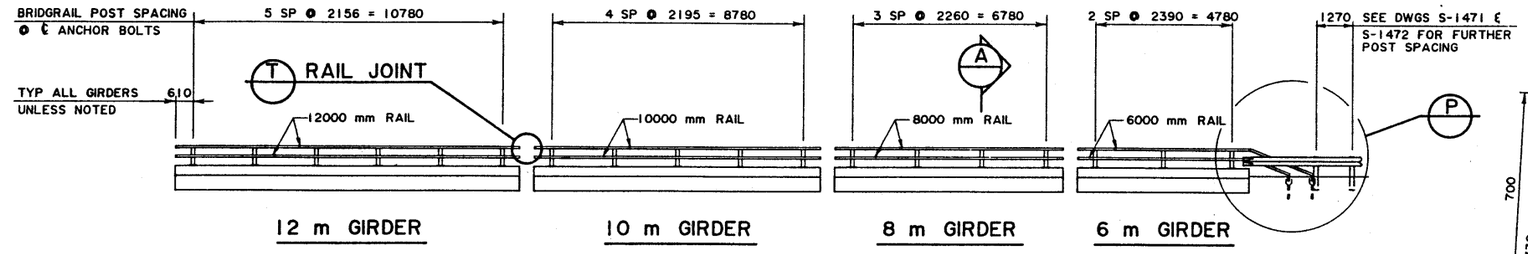

BRIDGERAIL POST LAYOUT ON INDIVIDUAL GIRDERS

1:100

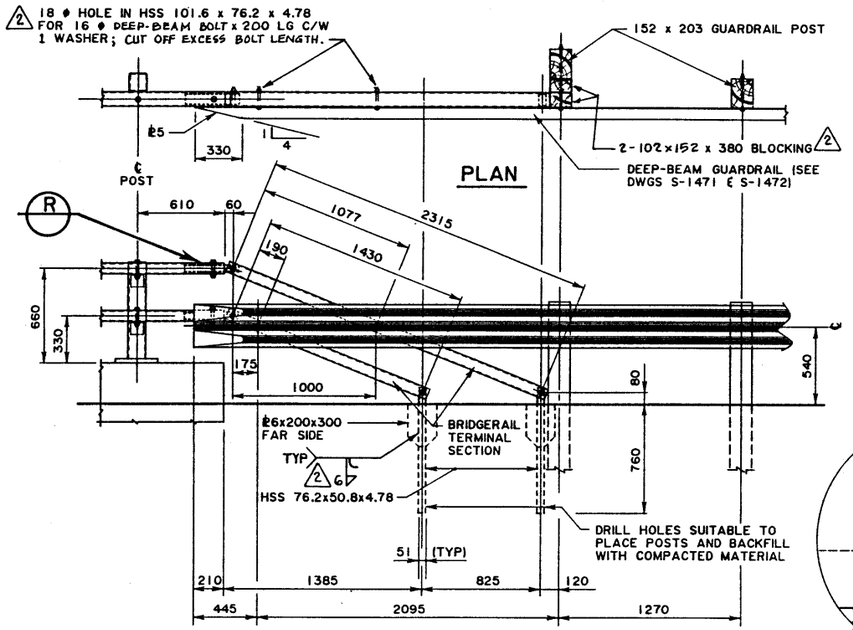

P DETAIL

1:20

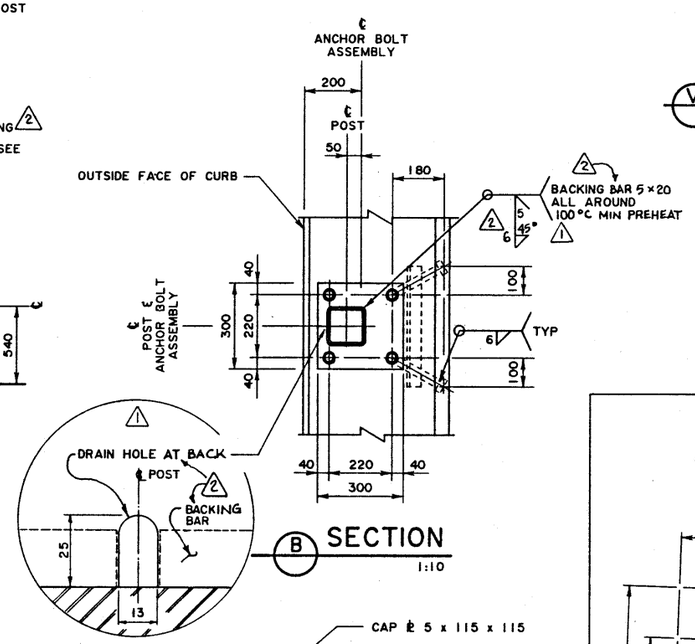

B SECTION

1:10

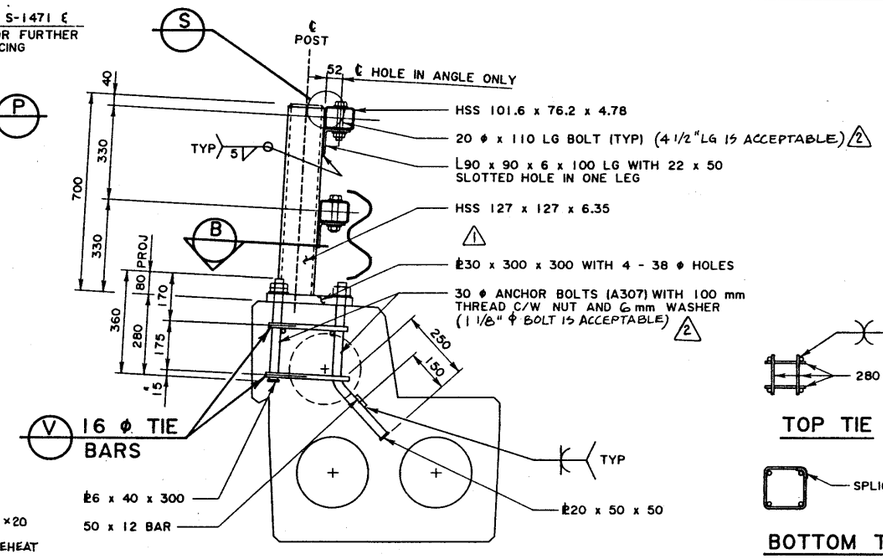

A TYPICAL SECTION AT POSTS

1:10

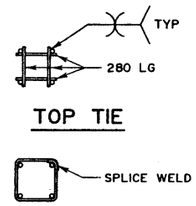

V 16 ϕ TIE BARS

1:20

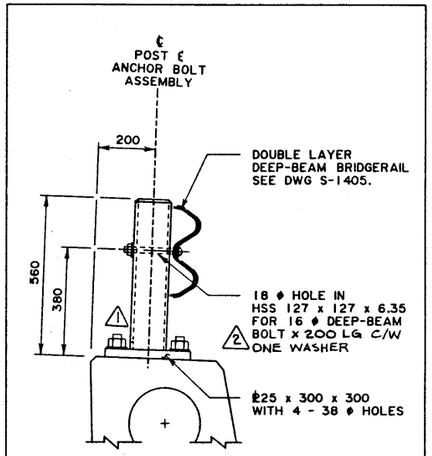

NOTE:
- DETAILS NOT SHOWN HERE ARE SIMILAR TO A SECTION WITH THE EXCLUSION OF ANGLE CLEATS FOR RAIL.
- SEE DWGS S-1471 & S-1472 FOR DETAILS OF TWISTED TERMINAL FOR DEEP-BEAM GUARDRAIL.

DEEP-BEAM ALTERNATE

FOR USE WITH ROADWAYS 9 m OR LESS. 1:10

GENERAL NOTES

1. ALL DIMENSIONS ARE IN MILLIMETRES UNLESS NOTED OTHERWISE.
2. DESIGN STANDARD CAN/CSA-S6-88 SPECIFICATIONS (ROADWAY RAILING).
3. 700 mm TUBE BRIDGERAIL WITH PARTICIPATING CURB SHALL BE USED FOR ROADWAY WIDTH OVER 9 m.
4. DEEP-BEAM BRIDGERAIL WITH PARTICIPATING CURB MAY BE USED FOR ROADWAY WIDTH 9 m OR LESS.

FABRICATION

1. ALL REQUIREMENTS OF CURRENT BRIDGE BRANCH SPECIFICATION FOR THE SUPPLY OF BRIDGERAIL (SPEC B-312M) SHALL BE MET.
2. ALL STEEL PLATES SHALL CONFORM TO ASTM SPECIFICATION A36 OR CSA G40.21 GRADE 300W. STRUCTURAL TUBING SHALL CONFORM TO ASTM A500B. ANCHOR BOLTS SHALL CONFORM TO A307.
3. ALL BOLTED CONNECTIONS, EXCEPT AS NOTED, SHALL BE MADE WITH 20 ϕ HIGH TENSILE STRENGTH BOLTS, NUTS AND TWO HARDENED WASHERS CONFORMING TO ASTM SPECIFICATION A325. (3/4" ϕ BOLTS ARE ACCEPTABLE REPLACEMENTS) 2
4. ALL WELDING SHALL CONFORM TO CURRENT AWS SPECIFICATION D1.5. 1
5. BRIDGE SHALL BE CONSIDERED LEVEL FOR BRIDGERAIL FABRICATION.
6. THE FOLLOWING MATERIALS SHALL BE HOT-DIP GALVANIZED AFTER FABRICATION IN ACCORDANCE WITH THE FOLLOWING SPECIFICATIONS: RAILING, POSTS AND GUARDRAIL-ASTM A123; ANCHOR BOLT ASSEMBLIES AND ALL CONNECTING HARDWARE-ASTM A153.
7. THE BOTTOM SURFACE OF THE BASE PLATES SHALL BE COATED BY AN APPROVED COATING SYSTEM, SUITABLE FOR APPLICATION ON GALVANIZED STEEL, TO PREVENT CONTACT BETWEEN THE ZINC AND THE CONCRETE. THE COLOUR OF THE COATING SHALL BE MEDIUM GREY.

ERECTION

1. ALL DIMENSIONS ARE MEASURED PARALLEL TO TOP OF CURBS AND ALONG CENTRELINE OF ANCHOR BOLT ASSEMBLIES.
2. ALL RAIL BOLTS SHALL BE TIGHTENED TO SNUG TIGHT ONLY. 2
3. LOCTITE THREADLOCKER NO. 271 ADHESIVE OR EQUIVALENT SHALL BE APPLIED TO THE ENGAGED THREADS IMMEDIATELY PRIOR TO TIGHTENING RAIL BOLTS. 2

SUPERSEDED 1 1A BY S-1600 rev. 3 94-03-09

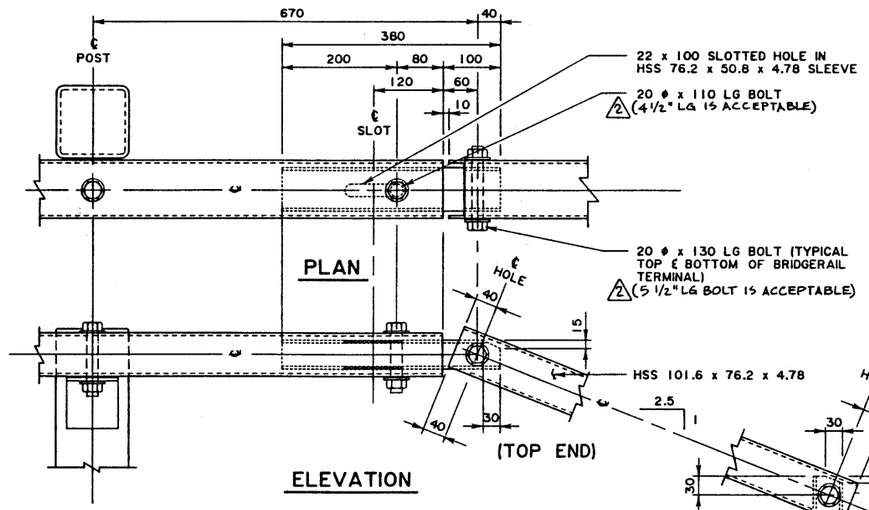

R DETAIL

1:5

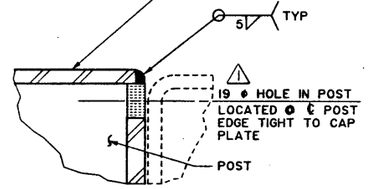

S DETAIL

NTS

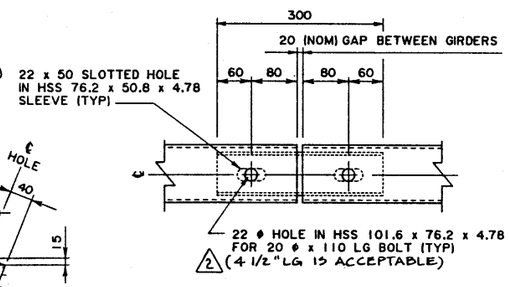

T TYPICAL RAIL JOINT

(TOP VIEW) (BETWEEN ALL GIRDERS) 1:5

REV	DATE	REVISIONS	BY
7			
6			
5			
4			
3			
2	92-01-20	WELDS, BOLTS, BLOCKING, GENERAL NOTES	DHQ
1	91-01-03	DRAIN HOLE, WELD DETAIL & WELDING NOTE	JRC

APPROVED
EXECUTIVE DIRECTOR BRIDGE ENGINEERING
DATE SEPT 7, 1990

Alberta TRANSPORTATION AND UTILITIES
BRIDGE ENGINEERING BRANCH

700 mm TUBE OR 560 mm DEEP-BEAM BRIDGERAIL STANDARD SC BRIDGES

DESIGNED	DRAWN	DATE	CHECKED	DATE	STREAM	LOCATION	HIGHWAY	FILE	SHEET OF	DRAWING
WP	VMV	90-08-22								S-1600

AT & U - RECORDS CENTRE P0489