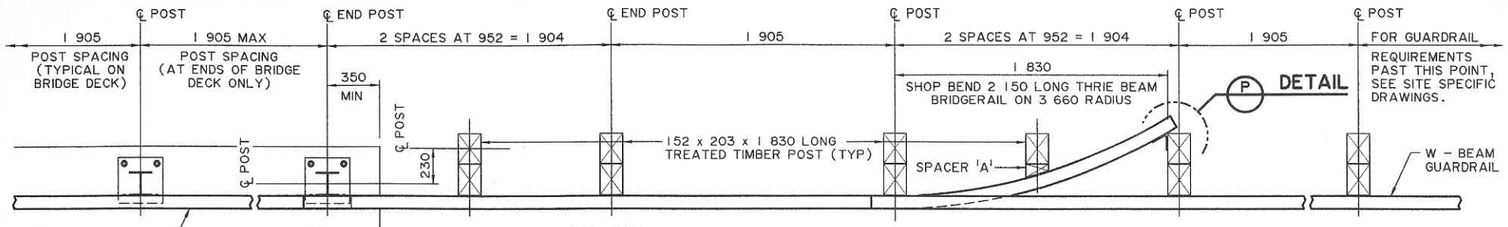

PLAN
1:20

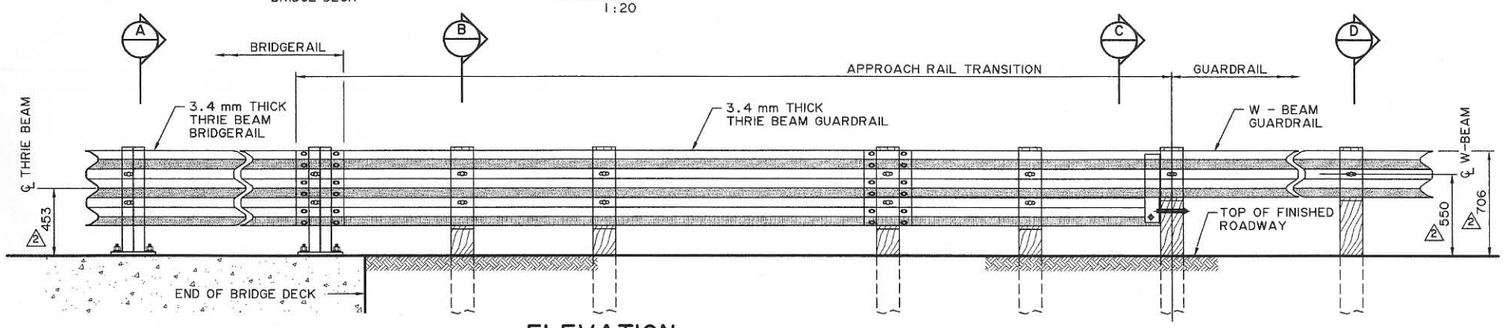

ELEVATION
1:20

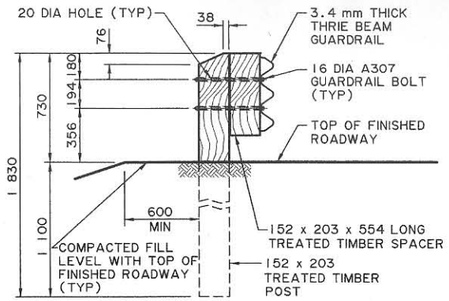

B SECTION
1:20

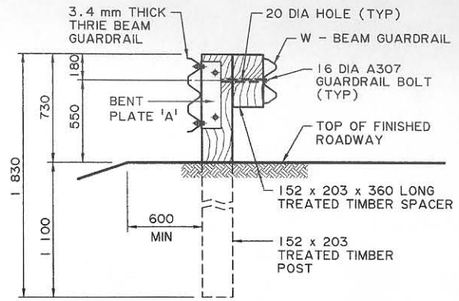

C SECTION
1:20

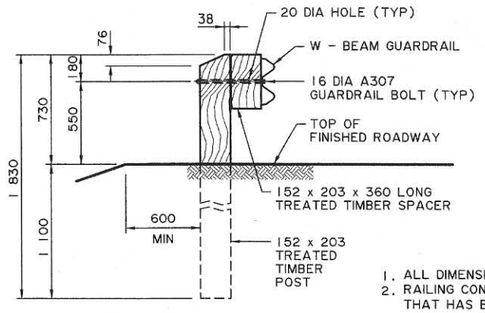

D SECTION
1:20

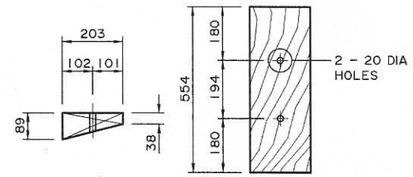

SPACER 'A' DETAIL
1:10

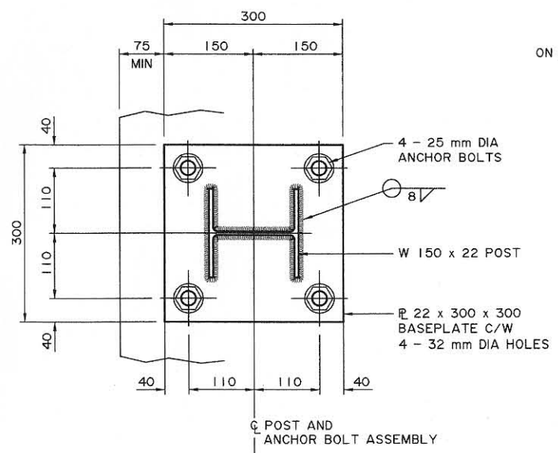

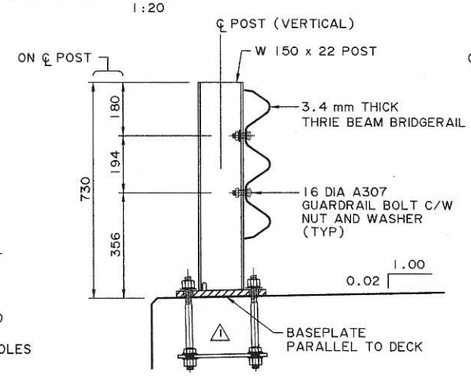

A SECTION
1:10

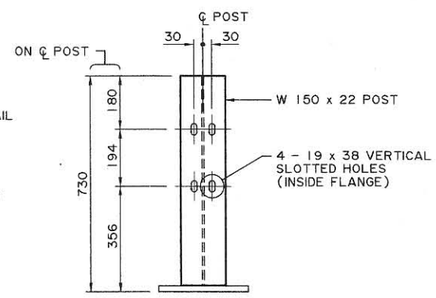

POST DETAIL
1:10

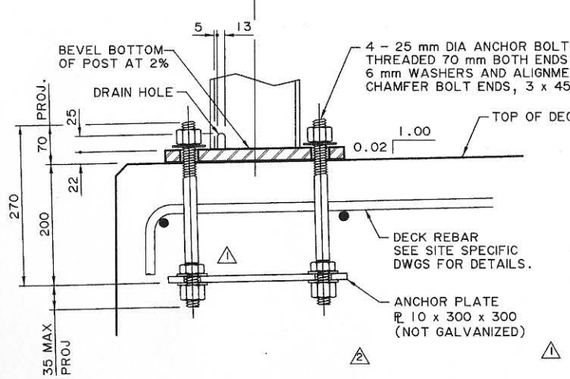

ANCHOR BOLT ASSEMBLY DETAIL
1:5

NOTE:
ANCHOR BOLT ASSEMBLY SHALL BE MINIMUM 25 mm CLEAR FROM BOTTOM OF DECK.

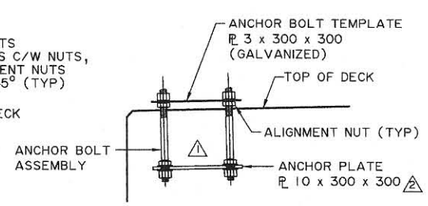

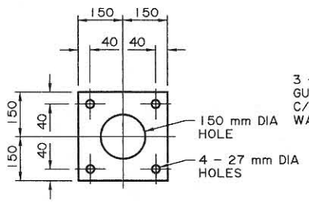

ANCHOR PLATE AND ANCHOR BOLT TEMPLATE DETAIL
1:10

NOTE:
ANCHOR BOLT TEMPLATE C/W NUTS AND ALIGNMENT NUTS TO BE INSTALLED DURING FABRICATION OF ANCHOR BOLT ASSEMBLIES. ANCHOR BOLT TEMPLATE AND ALIGNMENT NUTS TO BE REMOVED AFTER PLACING OF DECK CONCRETE AND PRIOR TO INSTALLATION OF W150x22 POST.

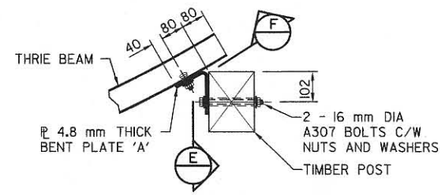

P BENT PLATE DETAIL
1:10

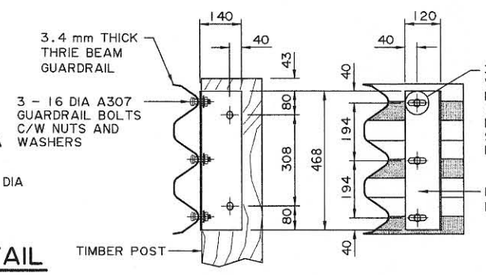

E SECTION
1:10

F SECTION
1:10

GENERAL NOTES

1. ALL DIMENSIONS ARE IN MILLIMETRES UNLESS NOTED OTHERWISE.
2. RAILING CONFIGURATION IS BASED ON A RAILING CONFIGURATION THAT HAS BEEN CRASH TESTED AND MEETS THE REQUIREMENTS OF PERFORMANCE LEVEL 1 OF THE AASHTO GUIDE SPECIFICATIONS FOR BRIDGE RAILING, 1989.
3. RAILING SHALL NOT BE USED WITH CURB.
4. RAILING SHALL BE USED FOR CLEAR ROADWAYS LESS THAN 9.0 m ONLY.
5. DESIGN OF DECK REBAR SHALL BE CARRIED OUT ON A SITE SPECIFIC BASIS TO DEVELOP THE CAPACITY OF THE BRIDGERAIL POSTS, BASED ON Fy = 350 MPa. (1)

FABRICATION

1. BRIDGERAIL, INCLUDING APPROACH RAIL TRANSITION, SHALL CONFORM TO THE CURRENT REQUIREMENTS OF THE SPECIFICATIONS FOR BRIDGE CONSTRUCTION SECTION 12 - BRIDGERAIL AND SECTION 14 - GUARDRAIL.
2. (1) ALL PLATE STEEL AND STRUCTURAL SHAPES SHALL CONFORM TO CSA G40.21 GRADE 350W OR ASTM A36.
3. ALL ANCHOR BOLTS SHALL CONFORM TO THE REQUIREMENTS OF ASTM A193 GRADE B7 (Fy = 725 Mpa, Fu = 860 Mpa). ALL NUTS AND WASHERS SHALL CONFORM TO A325. GALVANIZING SHALL STRICTLY FOLLOW THE FOLLOWING PROCEDURE WITH THE PRESENCE OF THE CONSULTANT: (1)
   - BRUSH BLAST ANCHOR BOLTS TO REMOVE MILL SCALE AND OIL AFTER THREADING ENDS.
   - FLASH PICKLING NOT TO EXCEED 5 MINUTES.
   - QUICK DRY PRIOR TO HOT-DIP GALVANIZING (DO NOT STORE IN FLUX OR ACID RINSE).
4. ALL W-BEAM AND THRIE BEAM GUARDRAIL (INCLUDING W-THRIE BEAM TRANSITION SECTION) SHALL HAVE A MIN. YIELD STRENGTH OF 345 MPa.
5. TIMBER POSTS AND SPACERS SHALL BE COAST DOUGLAS FIR, PACIFIC COAST HEMLOCK OR LODGEPOLE PINE CONFORMING TO THE STRESS GRADE "SELECT STRUCTURAL POSTS AND TIMBERS" (NLGA PARAGRAPH 131 a). (1)
6. ALL WELDING SHALL CONFORM TO CURRENT AWS SPECIFICATION D1.5.
7. ALL STEEL MATERIALS SHALL BE HOT-DIP GALVANIZED AFTER FABRICATION IN ACCORDANCE WITH CSA G164 UNLESS NOTED OTHERWISE.

ERECTION

1. BRIDGERAIL ANCHOR BOLTS SHALL BE TIGHTENED AN ADDITIONAL ½ TURN OF THE NUT PAST THE "SNUG TIGHT" CONDITION.
2. ALL POSTS SHALL BE PERPENDICULAR TO GRADE.
3. ALL DIMENSIONS ARE MEASURED PARALLEL TO TOP OF BRIDGE DECK AND ALONG THE CENTRELINE OF ANCHOR BOLT ASSEMBLIES.
4. LINE AND ELEVATION OF RAIL SHALL HAVE A TOLERANCE OF 6 mm.
5. ALL NON-STANDARD GUARDRAIL LENGTHS SHALL BE SAW CUT TO SUIT AND ALL NON-STANDARD GUARDRAIL HOLES SHALL BE DRILLED. FLAME CUTTING OF GUARDRAIL SHALL NOT BE ALLOWED. APPLY TWO COATS OF ZINC RICH PAINT ON AREAS DAMAGED BY SAW CUTTING OR DRILLING.

UMA Engineering Ltd.
Engineers, Planners & Surveyors

PERMIT TO PRACTICE
UMA ENGINEERING LTD.
PERMIT NUMBER: P 5778
ORIGINAL SIGNED AND STAMPED
BY: ART WASHUTA
ON: NOVEMBER 21, 2000
The Association of Professional Engineers, Geologists and Geophysicists of Alberta

DESIGNER — PROFESSIONAL ENGINEER ALBERTA — ORIGINAL STAMPED AND SIGNED — BY: R. J. RAMSAY — ON: NOV 21, 2000 — DATE

CHECKER — PROFESSIONAL ENGINEER ALBERTA — ORIGINAL STAMPED AND SIGNED — BY: D. B. SERINK — ON: NOV 21, 2000 — DATE

REV	DATE	REVISIONS	BY
6			
5			
4			
3			
2	2007-02-14	APPROACH RAIL HEIGHT	RY
1	2004-03-01	GENERAL NOTES	RY

RECOMMENDED
DIRECTOR BRIDGE ENGINEERING
ORIGINAL SIGNED BY
REG QUINTON

APPROVED
EXECUTIVE DIRECTOR
TECHNICAL STANDARDS BRANCH
ORIGINAL SIGNED BY
TIM HAWNT
DATE NOV 22, 2000

Alberta INFRASTRUCTURE

PL-1 LOW HEIGHT THRIE BEAM BRIDGERAIL

F831471

DATE	SHEET	OF	DRAWING
2000-03-27			S-1653-00

S1653x00.rv2