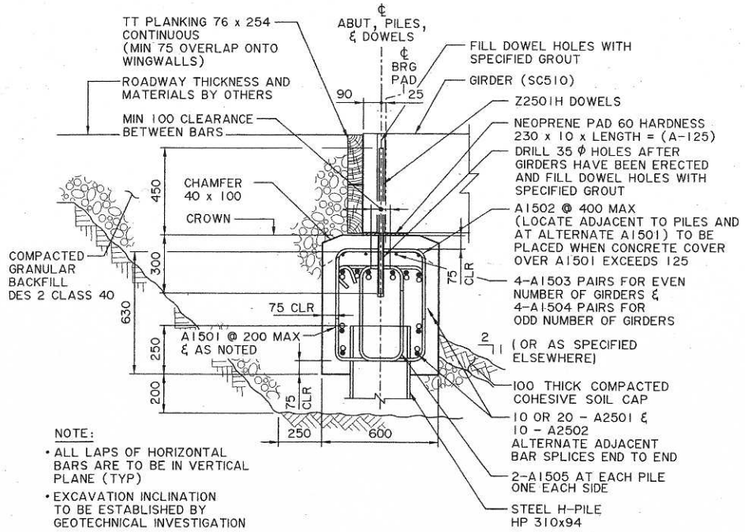

(A) ABUTMENT SECTION

S-1687-04 1:15

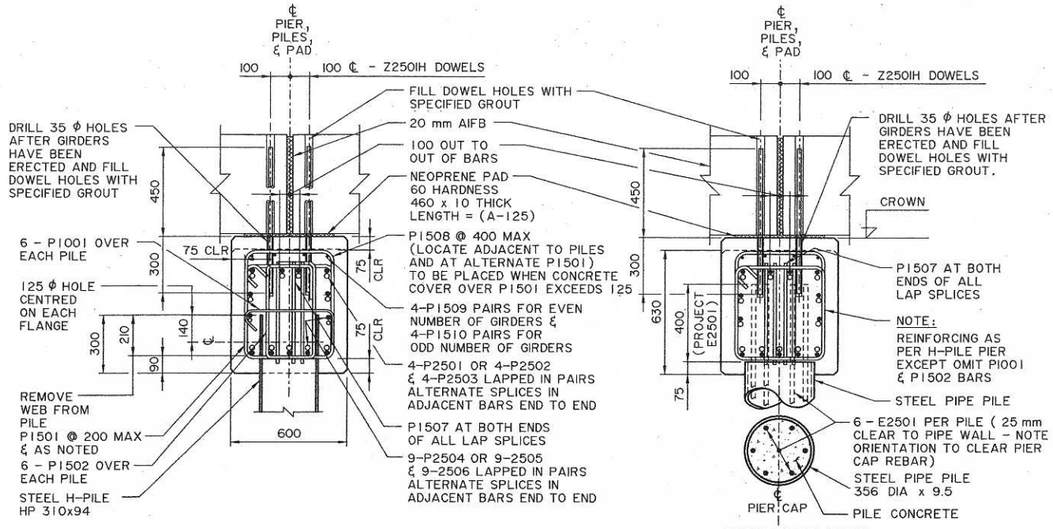

(B) PIER SECTION

S-1687-04 1:15

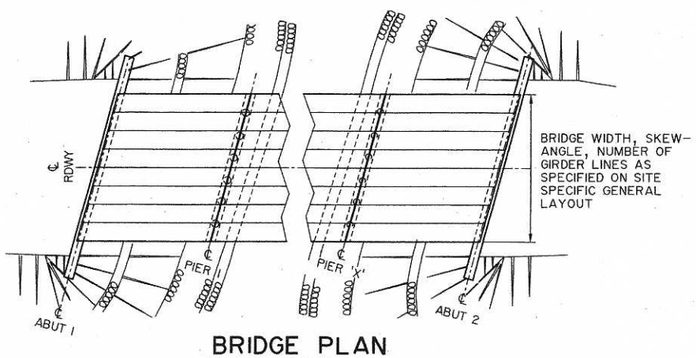

BRIDGE PLAN

NTS

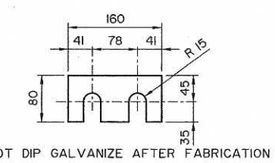

HOT DIP GALVANIZE AFTER FABRICATION

DROP-IN WASHER

• FOR SC-510 GIRDER TO GIRDER CONNECTIONS IN 2mm AND 4mm THICKNESSES USE 2-19mm DIAMETER A325 BOLTS (GALVANIZED) 1:5

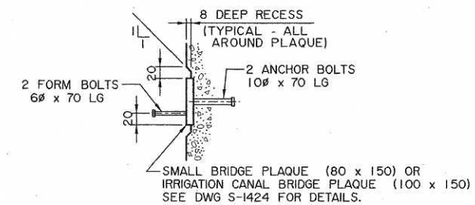

(R) BRIDGE PLAQUE

S-1687-04 1:5

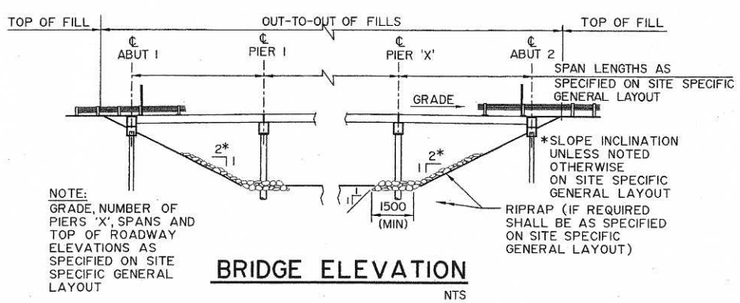

BRIDGE ELEVATION

NTS

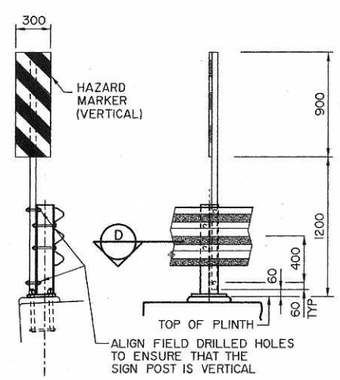

(S) HAZARD MARKER DETAILS

S-1687-04 (SHOWN AS FOR PL-1THRIE BEAM BRIDGERAIL) 1:25

2 REQ'D - RIGHT HAND
2 REQ'D - LEFT HAND
REQUIRED IF SPECIFIED IN SITE SPECIFIC GENERAL LAYOUT

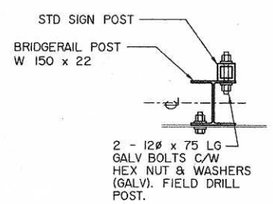

(D) SECTION

1:10

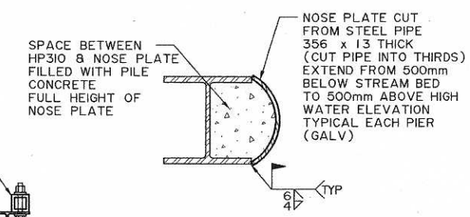

(E) SECTION

S-1687-04 (FOR UPSTREAM HP 310x94 PILE ONLY) 1:10

CONSTRUCTION

- ALL CONSTRUCTION WORK SHALL CONFORM TO THE CURRENT SPECIFICATIONS FOR BRIDGE CONSTRUCTION.
- WELDING SHALL CONFORM TO SPECIFICATION SECTION 13.4.1 "FIELD WELDING OF STRUCTURAL MEMBERS".
- PILES SHALL BE DRIVEN TO THE TIP ELEVATIONS SHOWN ON THE DRAWINGS, OR LOWER, TO ACHIEVE AT LEAST THE SPECIFIED MINIMUM BEARING CAPACITY. THE BEARING CAPACITIES SHALL BE ESTIMATED USING THE BEARING FORMULAS PRESENTED IN THE CURRENT SPECIFICATIONS FOR BRIDGE CONSTRUCTION.
- AFTER PILE DRIVING OPERATIONS HAVE STARTED, THE CONSULTANT MAY REVISE THE REQUIRED PILE TIP ELEVATIONS, PROVIDED THAT THE MINIMUM SPECIFIED BEARING CAPACITY AND SPECIFIED MINIMUM PILE PENETRATION HAVE BEEN ACHIEVED.

MINIMUM BEARING CAPACITY (ALLOWABLE LOADS)					
ABUT PILES (kN)		PIER PILES (kN)			
	SPANS	12m & 12.8m	10m	8m	6m
270	6m	490	430	390	350
300	8m	530	470	430	
340	10m	560	510		
400	12m & 12.8m	620			

- PIER PILES SHALL PENETRATE AT LEAST 5 m BELOW STREAMBED
- PILE TOLERANCES AS PER SPECIFICATIONS FOR BRIDGE CONSTRUCTION EXCEPT THAT BOTH PIER AND ABUTMENT PILES SHALL NOT BE OUT OF SPECIFIED POSITION BY MORE THAN 25mm.

- ALL REINFORCEMENT SHALL HAVE A CLEAR CONCRETE COVER OF 75 mm UNLESS NOTED OTHERWISE.
- PILE CONCRETE SHALL BE CURED AT LEAST 12 HOURS BEFORE PLACING PIER CAP CONCRETE.
- ALL CORNERS SHALL HAVE A 20 mm CHAMFER OR FILLET UNLESS NOTED OTHERWISE.
- ALL EXPOSED CONCRETE SURFACES EXCEPT BEARING AREAS SHALL BE GIVEN A CLASS 2 FINISH.
- TREATED TIMBER (TT) SHALL BE HANDLED TO AVOID BRUISING, BREAKING OR PENETRATION OF OUTER FIBRES. LIFTING TOOLS SHALL BE APPLIED ONLY ON ENDS OF TT PIECES. ALL CUTS AND BRUISES SHALL BE CAREFULLY TRIMMED AND SHALL RECEIVE 2 APPLICATIONS OF CREOSOTE FOLLOWED BY A THOROUGH COVERING WITH HOT ROOFING PITCH.

GIRDER INSTALLATION

- REFER TO TYPE SC-510 GIRDER DRAWINGS (LATEST REVISION) AS APPLICABLE:

6 m	S-1656 TO S-1657	10 m	S-1660 TO S-1661
8 m	S-1658 TO S-1659	12 m	S-1662 TO S-1663
		12.8 m	S-1678 TO S-1679

- GIRDERS SHALL BE CONNECTED TOGETHER WITH 20mm Φ A325 BOLT ASSEMBLIES, C/W DROP-IN WASHERS TO FILL GAP BETWEEN GIRDERS, TORQUED TO 400 Nm. GIRDERS SHALL NOT TOUCH EXCEPT THROUGH DROP-IN WASHERS. BOLTS AND WASHERS TO BE HOT-DIPPED GALVANIZED.
- CONNECTOR AND LIFTING HOOK POCKETS SHALL BE FILLED WITH A DEPARTMENT APPROVED CONCRETE PATCHING MATERIAL.

MATERIALS

- ALL CONCRETE SHALL BE CLASS C, OR PILE CONCRETE FOR PIPE PILE INFILL. SULPHATE RESISTANT PORTLAND CEMENT (TYPE 50) SHALL BE USED FOR ALL CONCRETE IF DETERMINED NECESSARY FROM GEOTECHNICAL INVESTIGATION FINDINGS.
- REINFORCING STEEL SHALL CONFORM TO G30.18M GRADE 400. REBAR BENDING DETAILS SHALL CONFORM TO THE CURRENT REQUIREMENTS OF THE MANUAL OF STANDARD PRACTICE OF REINFORCING STEEL INSTITUTE OF CANADA.
- GIRDER DOWELS SHALL BE FABRICATED FROM SMOOTH ROUND BAR STOCK CONFORMING TO ASTM A193-B7 (Fy = 725MPa, Fu = 860MPa). GALVANIZING SHALL STRICTLY FOLLOW THE FOLLOWING PROCEDURE WITH THE PRESENCE OF THE CONSULTANT:
  - BRUSH BLAST DOWELS TO REMOVE MILL SCALE AND OIL.
  - FLASH PICKLING NOT TO EXCEED 5 MINUTES.
  - QUICK DRY PRIOR TO HOT-DIP GALVANIZING (DO NOT STORE IN FLUX OR ACID RINSE.)
- ALL STEEL PLATE AND SHAPES SHALL CONFORM TO THE REQUIREMENTS OF CSA G40.21M GRADE 350W EXCEPT PIPE MATERIAL WHICH SHALL CONFORM TO THE REQUIREMENTS OF ASTM 252 GRADE 2 (Fy = 240MPa).
- PIER PILES AND BRACES SHALL BE HOT-DIPPED GALVANIZED. GALVANIZING MAY BE OMITTED FROM PILE SURFACES LOCATED MORE THAN 1000 mm BELOW GROUNDLINE. ALL FIELD WELDS OF GALVANIZED MATERIAL SHALL BE TOUCHED-UP WITH MINIMUM TWO COATS OF DEPARTMENT APPROVED ZINC-RICH PAINT AND ARE SUBJECT TO THE APPROVAL OF THE CONSULTANT.
- GALVANIZING SHALL CONFORM TO THE CURRENT CSA STANDARD G164.
- ALL WELDING SHALL CONFORM TO THE CURRENT AWS SPECIFICATION D1.5.
- TREATED TIMBER (TT) SHALL CONFORM TO SECTION 23 OF THE SPECIFICATIONS FOR BRIDGE CONSTRUCTION.
- GRANULAR BACKFILL SHALL BE PLACED TO A MINIMUM OF 95% PROCTOR DENSITY AND OTHERWISE CONFORM TO THE SPECIFICATIONS FOR BRIDGE CONSTRUCTION.
- BEARING PADS SHALL CONSIST OF NEOPRENE 60 HARDNESS AND SHALL CONFORM TO SECTION 18 "BEARING DEVICES" DIVISION II OF AASHTO DESIGN STANDARD.
- DOWEL HOLE GROUT TO BE SIKA 212 MINIMUM 28 DAY STRENGTH = 40MPa.
- ASPHALT IMPREGNATED FIBREBOARD (AIFB) SHALL CONFORM TO THE CURRENT ASTM SPECIFICATION D1751 FOR PREFORMED EXPANSION JOINT FILLER.

WORK DRAWINGS S-1687-04, S-1688-04, AND S-1689-04 TOGETHER WITH SITE SPECIFIC GENERAL LAYOUT

CH2MHILL
"Responsible Solutions for a Sustainable Future"

PERMIT TO PRACTICE
CH2M HILL CANADA, LIMITED
Signature C. T. Yu
Date January 27, 2005
PERMIT NUMBER: P 2558
The Association of Professional Engineers, Geologists and Geophysicists of Alberta

DESIGNER
PROFESSIONAL ENGINEER ALBERTA — NOLAN G. DOMCHE
DATE JAN 27, 2005

CHECKER
PROFESSIONAL ENGINEER ALBERTA — JERRY J. KRIVY
DATE Jan 27, 2005

REV	DATE	REVISIONS	BY
6			
5			
4			
3			
2			
1	2005-01-27	REDRAWN FROM S-1601-91 & S-1602-91 (REV. 3) TO COMPLY WITH CAN/CSA-S6-00 & NEW CURB GIRDERS	NGD

RECOMMENDED
DIRECTOR BRIDGE ENGINEERING
C. T. Clarke

APPROVED
EXECUTIVE DIRECTOR
TECHNICAL STANDARDS BRANCH
Allan Evan
DATE Feb 3/05

Alberta TRANSPORTATION

SC PRECAST GIRDER BRIDGES WITH CAST-IN-PLACE CONCRETE SUBSTRUCTURES - SHT 2

DEPARTMENT BAR CODE	DATE	SHEET	DRAWING
	2005-01-27	2 OF 3	S-1688-04