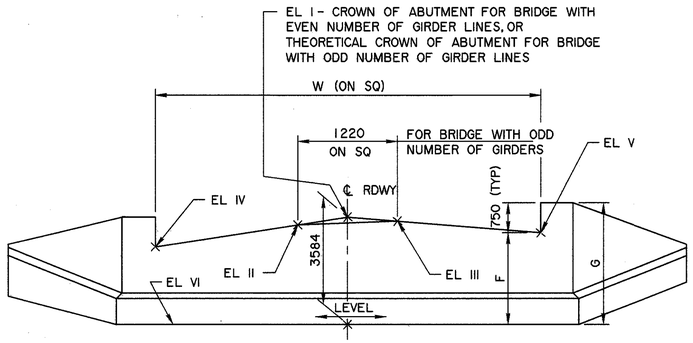

BACKWALL DIMENSION DETAIL

NTS

NOTES:

- EL I, IV, V & VI TO BE SPECIFIED ON SITE-SPECIFIC DRAWINGS FOR BRIDGE WITH EVEN NUMBER OF GIRDERS
- EL II, III, IV, V & VI TO BE SPECIFIED ON SITE-SPECIFIC DRAWINGS FOR BRIDGE WITH ODD NUMBER OF GIRDERS

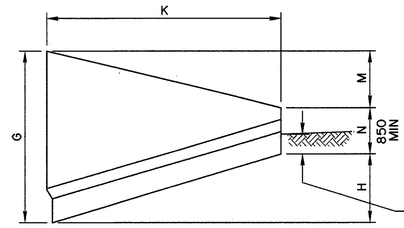

NOTE:
DIMENSION "N" AND "H" TO BE SPECIFIED ON SITE-SPECIFIC DRAWINGS BASED ON NATURAL GROUND ELEVATIONS AT WINGWALL END. FOR OTHER DIMENSIONS SEE DATA TABLE ON DWG S-1710-07

BOTTOM OF WINGWALL END TO BE 600 MINIMUM BELOW NATURAL GROUND

WINGWALL DIMENSION DETAIL

VIEW FROM BACK FACE

NTS

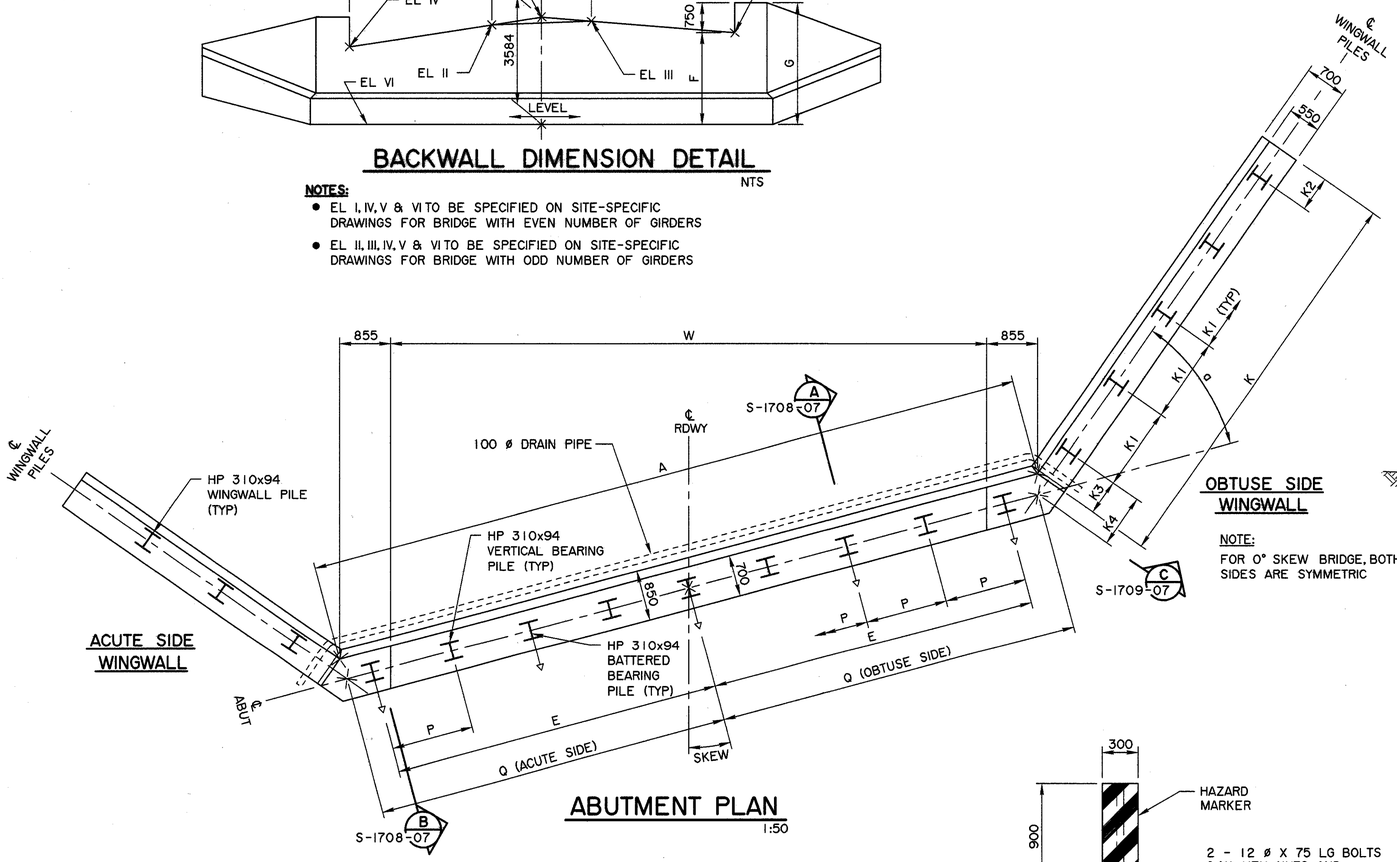

ACUTE SIDE WINGWALL

OBTUSE SIDE WINGWALL

NOTE:
FOR 0° SKEW BRIDGE, BOTH SIDES ARE SYMMETRIC

ABUTMENT PLAN

1:50

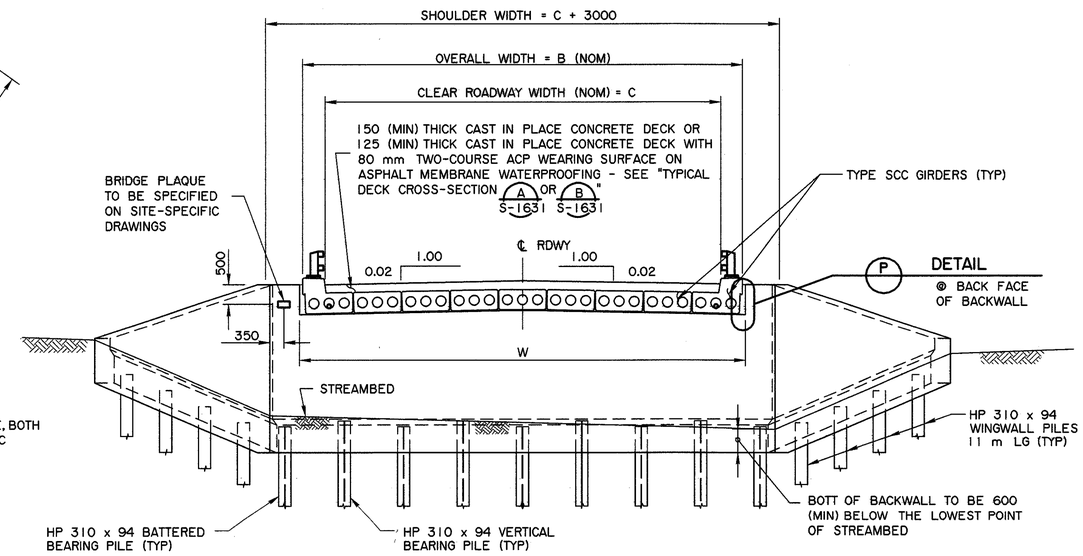

ABUTMENT ELEVATION

1:75

- 0° SKEW BRIDGE ABUTMENT AS SHOWN 15° & 30° SKEW BRIDGES SIMILAR
- RIPRAP NOT SHOWN FOR CLARITY

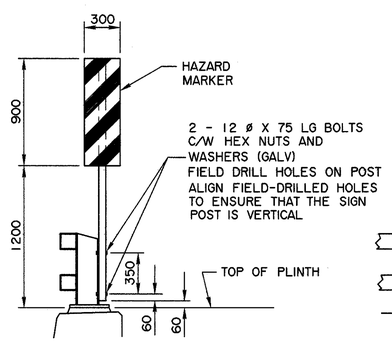

HAZARD MARKER DETAILS

REQUIREMENT OF HAZARD MARKERS AS SPECIFIED ON SITE-SPECIFIC DRAWINGS

1 :25

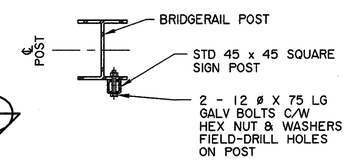

F SECTION

1:10

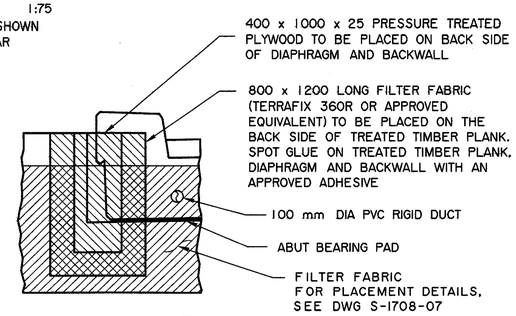

P DETAIL

1:25

@ BACK FACE OF BACKWALL

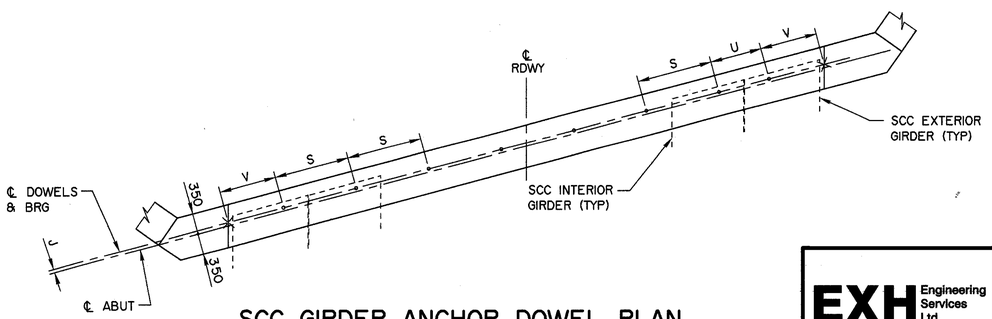

SCC GIRDER ANCHOR DOWEL PLAN

1:50

EXH Engineering Services Ltd.

PERMIT TO PRACTICE
EXH ENGINEERING SERVICES LTD.
Signature
Date Aug. 14, 2007
PERMIT NUMBER: P 5347
The Association of Professional Engineers, Geologists and Geophysicists of Alberta

DESIGNER — PROFESSIONAL ENGINEER YING YI LI ALBERTA — DATE Aug. 14, 2007

CHECKER — PROFESSIONAL ENGINEER SAMUEL TEKLE ALBERTA — DATE Aug. 14, 2007

REV	DATE	REVISIONS	BY
6			
5			
4			
3			
2			
1			

RECOMMENDED DIRECTOR BRIDGE ENGINEERING

APPROVED EXECUTIVE DIRECTOR TECHNICAL STANDARDS BRANCH — DATE Sep 4/07

Alberta INFRASTRUCTURE AND TRANSPORTATION

SCC PRECAST GIRDER BRIDGES WITH CAST-IN-PLACE CONCRETE HIGH BACKWALL ABUTMENTS - SHT 2

DEPARTMENT BAR CODE	DATE	SHEET	DRAWING
	2007-06-07	2 OF 5	S-1707-07