NOTE: FOR SKEWED END REINFORCING BAR DETAILS SEE DWG S-1724-07

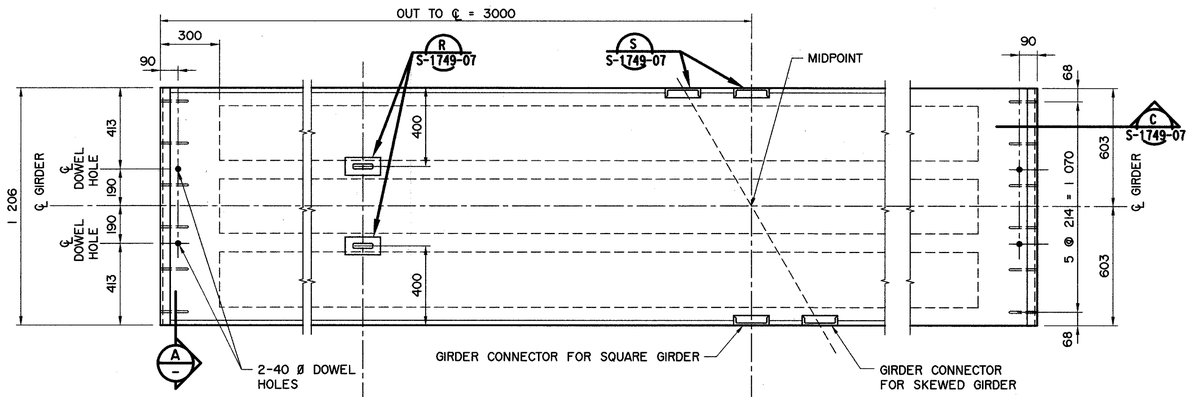

PLAN VIEW
1:15

NOTE:
BEND REINFORCING BAR WHERE NECESSARY TO ACCOMMODATE CHANNEL CONNECTORS. STIRRUP SPACING TO BE MAINTAINED.

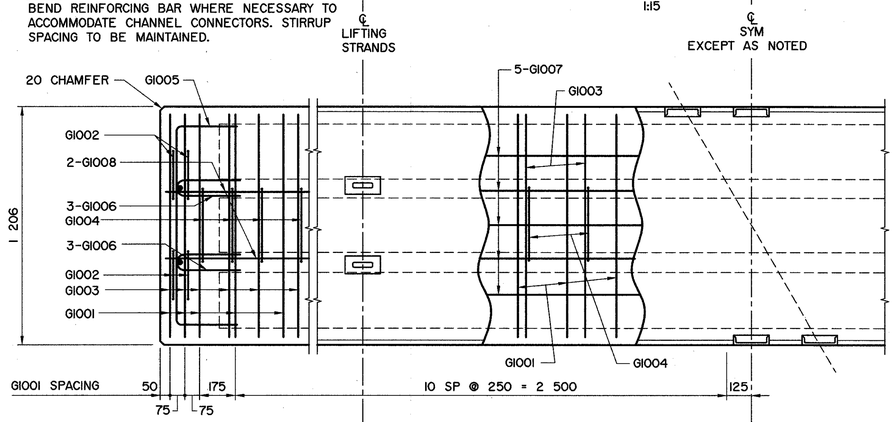

REINFORCEMENT PLAN
1:15

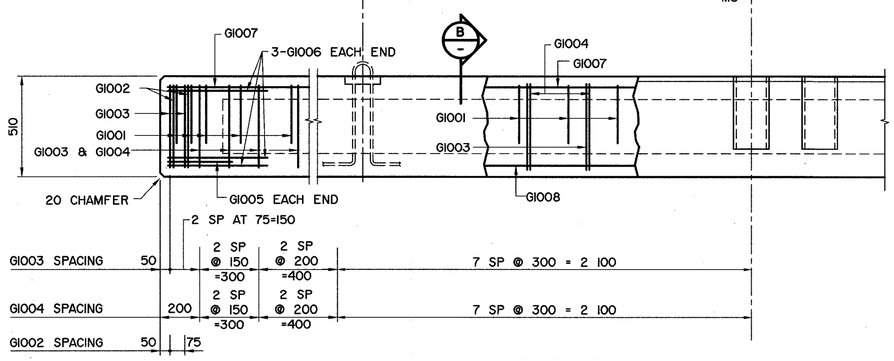

ELEVATION
1:15

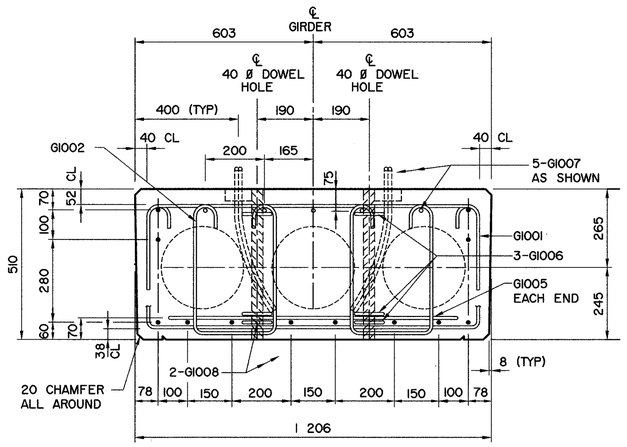

A SECTION
1:10

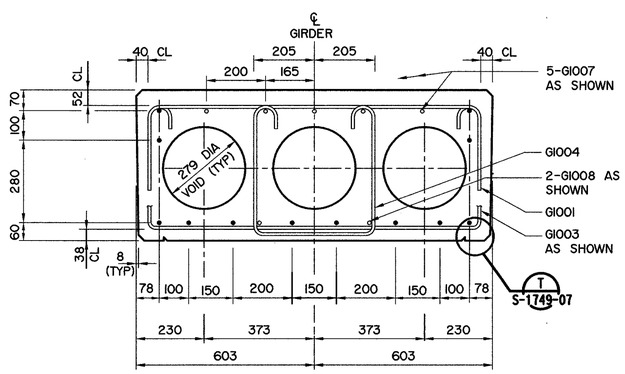

B SECTION
1:10

BAR LIST: FOR SQUARE GIRDER

MARK	SIZE	No.	TYPE	X	Y	LENGTH	MASS
G1001	10	28	A	1 125	300	1 725	38
G1002	10	8	B	280		1 380	9
G1003	10	27	B	1 125		2 225	47
G1004	10	23	B	410		1 510	27
G1005	10	2	A	1 000	300	1 600	3
G1006	10	12	D			1 075	10
G1007	10	5	STR			5 900	23
G1008	10	2	STR			5 800	9

TOTAL PLAIN kg: 166

BAR TYPES
(ALL BAR DIMENSIONS ARE OUT TO OUT)

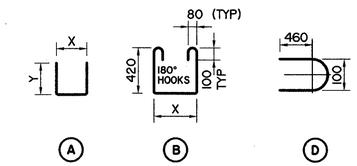

GENERAL NOTES

- FOR ADDITIONAL NOTES, REFER TO DWG S-1749-07.
- 12-15 ø 7 WIRE STRANDS REQUIRED PER GIRDER.
- FORCE IN PRESTRESSING STEEL:
  INITIAL TENSION BEFORE RELEASE = 195 kN/STRAND
  DESIGN LOAD AFTER LOSSES = 158 kN/STRAND
- CALCULATED MASS OF ONE GIRDER = 6.68 TONNES

- WORK THESE DRAWINGS TOGETHER : S-1723-07, S-1724-07 AND S-1749-07

BPTEC - DNW Engineering Ltd.
Suite 200, 4220-98 St. Edmonton, AB T6E 6A1
Ph: (780) 436-5376 Fax: (780) 435-4843
www.bptec-dnw.com
556-46

PERMIT TO PRACTICE
BPTEC-DNW ENGINEERING LTD.
Signature
Date August 1, 2007
PERMIT NUMBER: P0132
The Association of Professional Engineers Geologists and Geophysicists of Alberta

DESIGNER
PROFESSIONAL ENGINEER ALBERTA
DATE

CHECKER
PROFESSIONAL ENGINEER ALBERTA
DATE

REV	DATE	REVISIONS	BY
6			
5			
4			
3			
2			
1			

RECOMMENDED
DIRECTOR BRIDGE ENGINEERING

APPROVED
EXECUTIVE DIRECTOR
TECHNICAL STANDARDS BRANCH
DATE Sept 17, 2007

Alberta INFRASTRUCTURE AND TRANSPORTATION

PRESTRESSED CONCRETE
6 m TYPE SL-510
INTERIOR GIRDER

AI BAR CODE	DATE	SHEET	DRAWING
	2007-06-07	1 of 3	S-1723-07