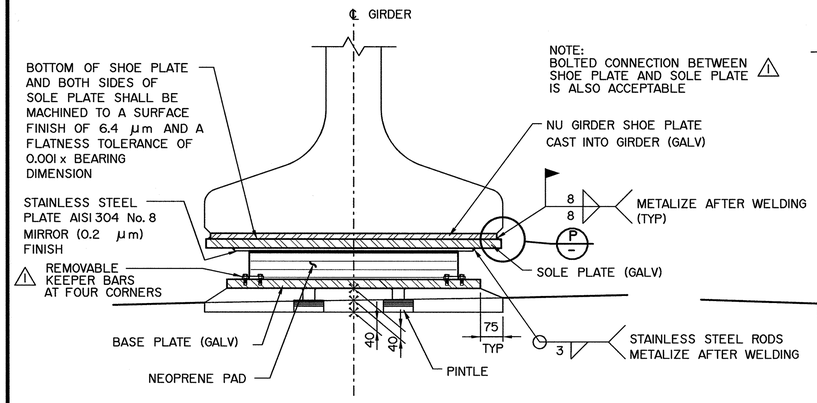

SECTION

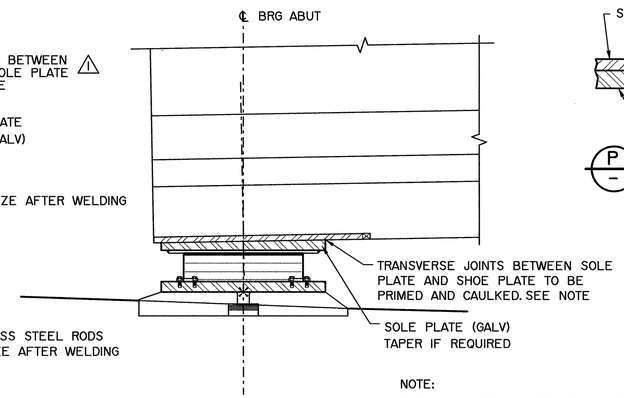

ELEVATION

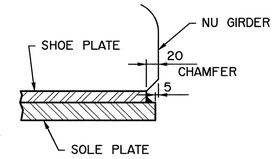

P DETAIL 1:5

NOTE:

FOR GALVANIZED PLATES, TRANSVERSE JOINTS BETWEEN SOLE PLATE AND SHOE PLATE TO BE PREPARED AS FOLLOWS:

1. SOLVENT WIPE (XYLENE) ON FOLLOWED BY A WIPE OFF WITH CLEAN DRY RAG
2. APPLY SIKAFLEX PRIMER 205 OR APPROVED EQUIVALENT
3. CAULK WITH SIKAFLEX IA OR APPROVED EQUIVALENT

NU CONCRETE GIRDER EXPANSION BEARING DETAILS

1:10

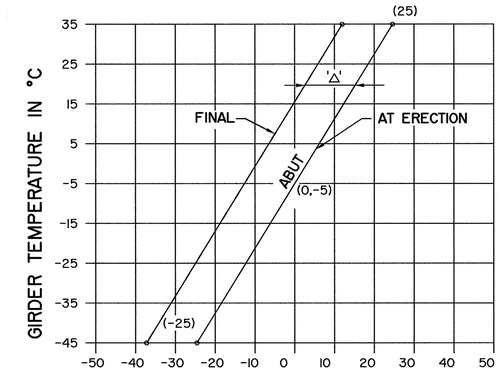

"X" DISPLACEMENT (mm)

ABUTMENT EXPANSION BEARING SETTING CHART

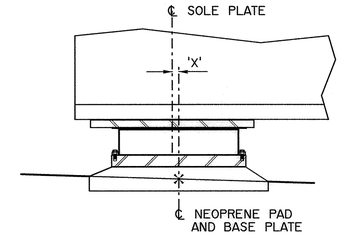

TYPICAL ABUTMENT

'X' IS POSITIVE WHEN MEASURED FROM ℄ BASE PLATE TOWARD GIRDER END

'Δ' ACCOUNTS FOR ALL CREEP, SHRINKAGE AND RELAXATION THAT OCCURS WITH NU GIRDERS AFTER BEARINGS ARE SET AND GROUTED

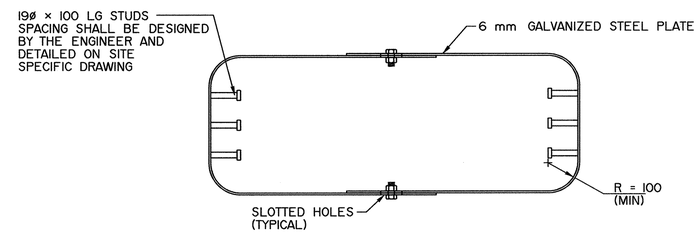

EMBEDED STEEL PLATE DETAIL ⚠1

1:10

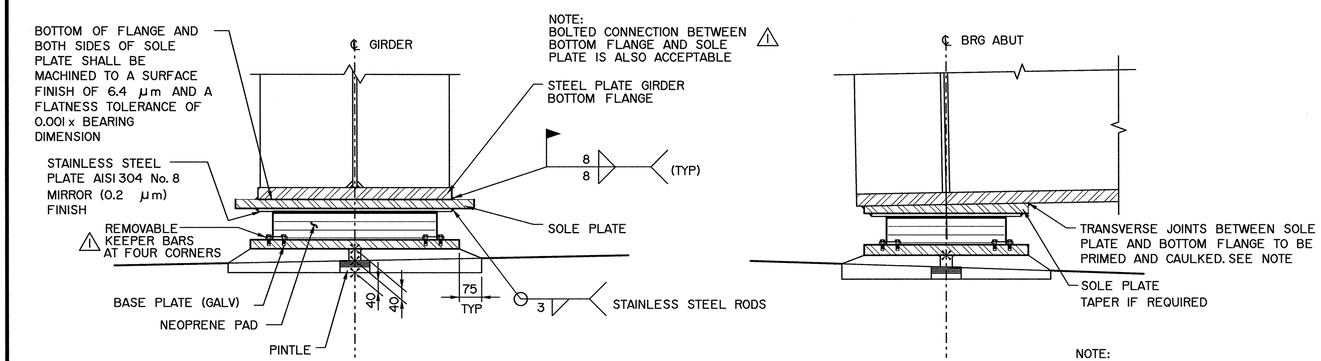

SECTION

ELEVATION

NOTE:

FOR WEATHERED STEEL PLATES, TRANSVERSE JOINTS BETWEEN SOLE PLATE AND BOTTOM FLANGE TO BE PREPARED AS FOLLOWS:

1. HAND TOOL CLEANED TO REMOVE EXCESS OXIDATION PRODUCTS
2. SOLVENT WIPE (XYLENE) ON FOLLOWED BY A WIPE OFF WITH CLEAN DRY RAG
3. APPLY SIKAFLEX PRIMER 205 OR APPROVED EQUIVALENT
4. CAULK WITH SIKAFLEX IA OR APPROVED EQUIVALENT

STEEL PLATE GIRDER EXPANSION BEARING DETAILS

1:10

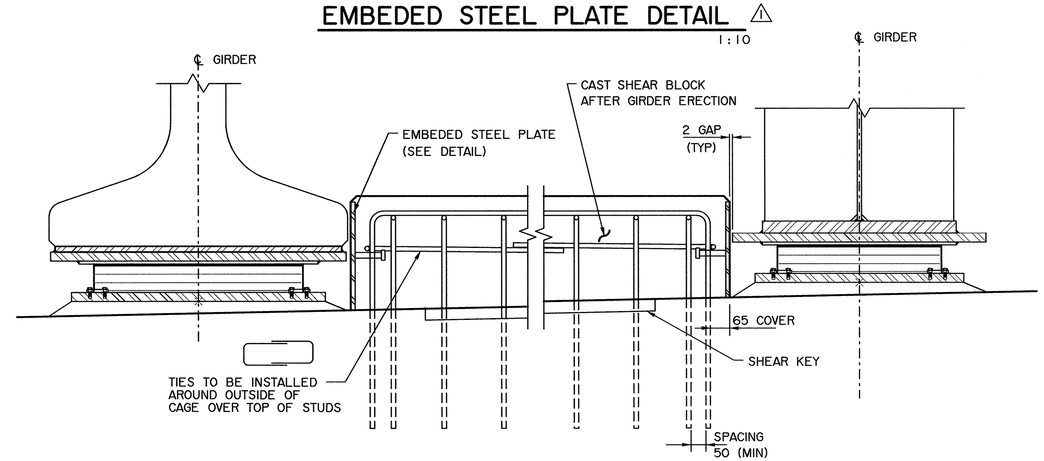

⚠1 CONCRETE KEEPER BLOCK DETAILS

1:10

DETAILS SHOWN ARE CONCEPTUAL AND REPRESENT DEPARTMENT PRACTICES AS REFERENCED IN THE BRIDGE STRUCTURES DESIGN CRITERIA. FULL RESPONSIBILITY FOR DESIGN OF DETAILS REMAINS WITH THE CONSULTANT.

NOT FOR CONSTRUCTION

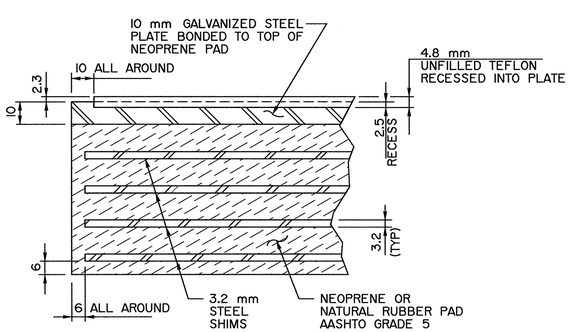

NEOPRENE PAD DETAIL ⚠1

NTS

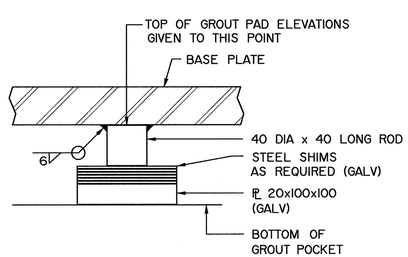

PINTLE DETAIL

GALVANIZE AFTER FABRICATION NTS

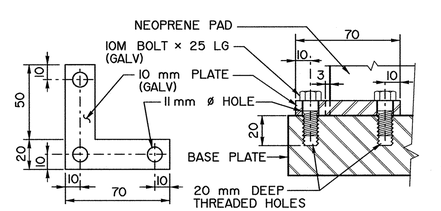

⚠1 REMOVABLE KEEPER BARS

NTS

REV	DATE	REVISIONS	BY
6			
5			
4			
3			
2			
1	2012-01-18	NEOPRENE PAD, KEEPER BARS AND EMBEDED STEEL PLATE	MS

RECOMMENDED DIRECTOR BRIDGE ENGINEERING

APPROVED EXECUTIVE DIRECTOR TECHNICAL STANDARDS BRANCH

DATE

Alberta Transportation

TYPICAL EXPANSION BEARING DETAILS

DATE	SHEET	DRAWING
2009.01.23	5 OF 5	S-1761-08

NH 2012-01-18 s-1761-08 rev1.dgn