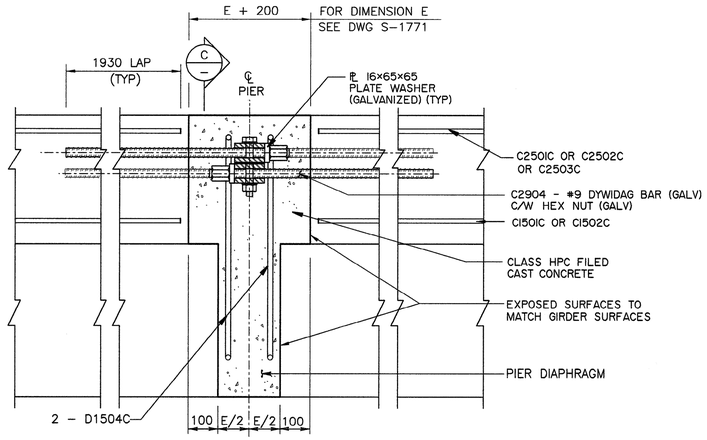

CURB BLOCKOUT AT PIERS

NTS

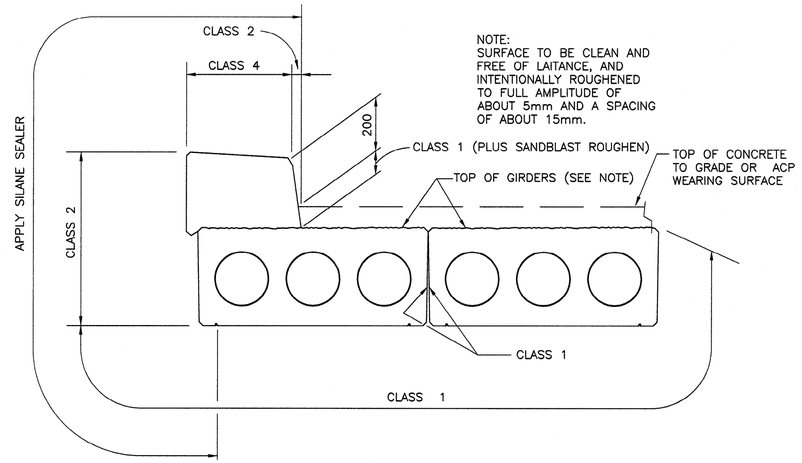

PRECAST GIRDER FINISHES

NTS

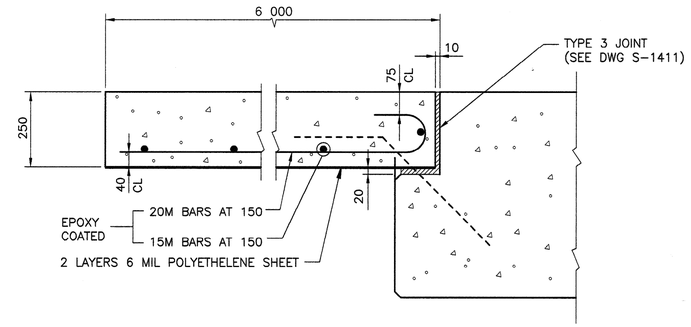

BRIDGE END DETAIL – CONCRETE TO GRADE

1:10

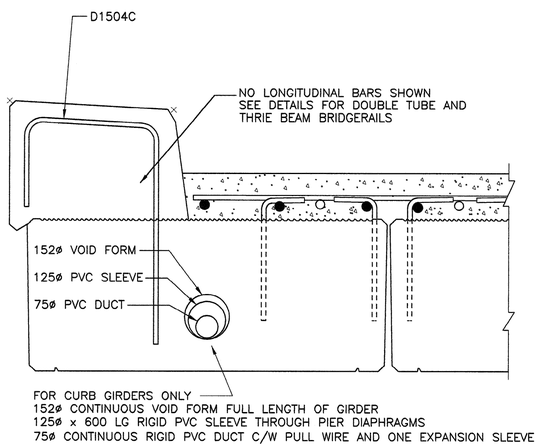

C SECTION

S-1771, S-1773 1:10

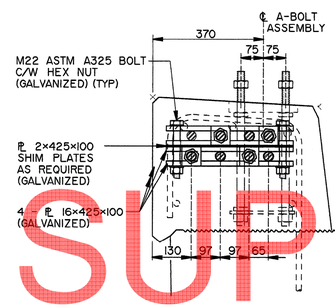

THRIE BEAM BRIDGERAIL

1:10

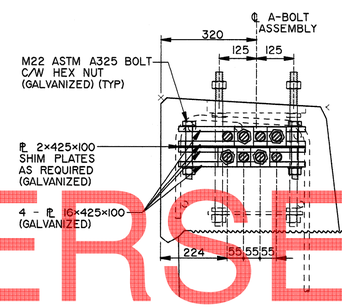

DOUBLE TUBE BRIDGERAIL

1:10

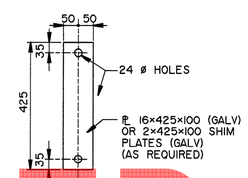

CONNECTION PLATE

1:10

SUPERSEDED

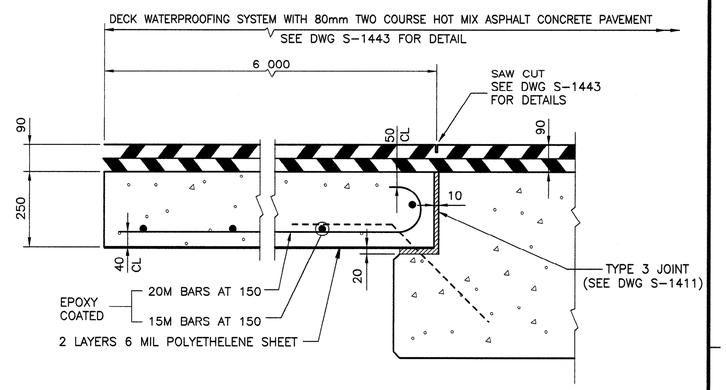

BRIDGE END DETAIL – ACP WEARING SURFACE

1:10

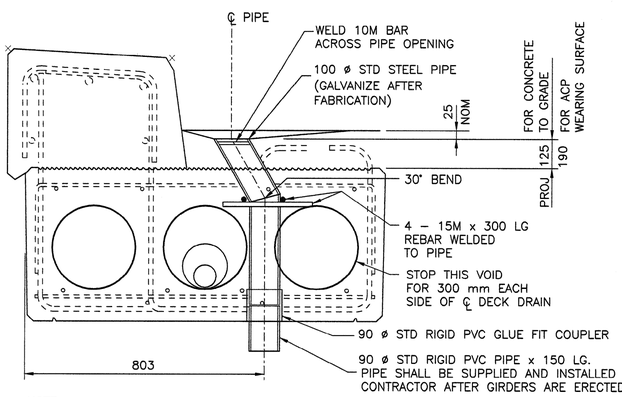

NOTE:
ADJUST PIPE LOCATION AS REQUIRED TO CLEAR REINFORCING

Y DECK DRAIN – SECTION

1:10

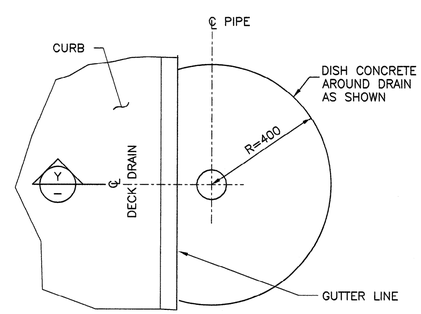

R DECK DRAIN – PLAN

S-1772 (FOR CONCRETE TO GRADE) 1:10

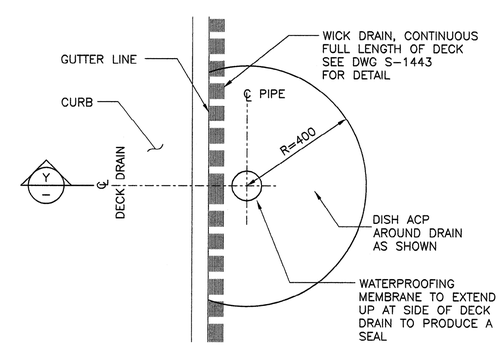

S DECK DRAIN – PLAN

S-1772 (FOR ACP WEARING SURFACE) 1:10

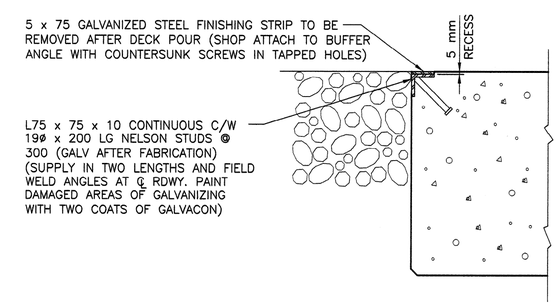

BRIDGE END DETAIL – NO APPROACH SLAB

1:10

* FOR GENERAL NOTES, SEE DWG. S-1771

ISL Engineering and Land Services

PERMIT TO PRACTICE
ISL Engineering and Land Services Ltd.
Signature
Date Aug 15, 2008
PERMIT NUMBER: P 4741
The Association of Professional Engineers, Geologists and Geophysicists of Alberta

DESIGNER: PROFESSIONAL ENGINEER ALBERTA, WARREN PARTY — DATE Aug 15 '08

CHECKER: PROFESSIONAL ENGINEER ALBERTA, P.K. FAIRBRIDGE — DATE AUG 15, 2008

REV	DATE	REVISIONS	BY
6			
5			
4			
3			
2			
1			

RECOMMENDED
DIRECTOR BRIDGE ENGINEERING
Tom Loo

APPROVED
EXECUTIVE DIRECTOR
TECHNICAL STANDARDS BRANCH
Allan Swan
DATE August 22, 2008

Alberta Transportation

STANDARD SLC COMPOSITE BRIDGES
SLC510 PRESTRESSED CONCRETE GIRDERS
DECK DETAILS – SHEET 2

DEPARTMENT BAR CODE	DATE	SHEET	DRAWING
–	2008-06-30	3 OF 7	S-1773-08

NH AUG 18, 2008 S-1773-08.DWG -DRAWN-BY-RWK-