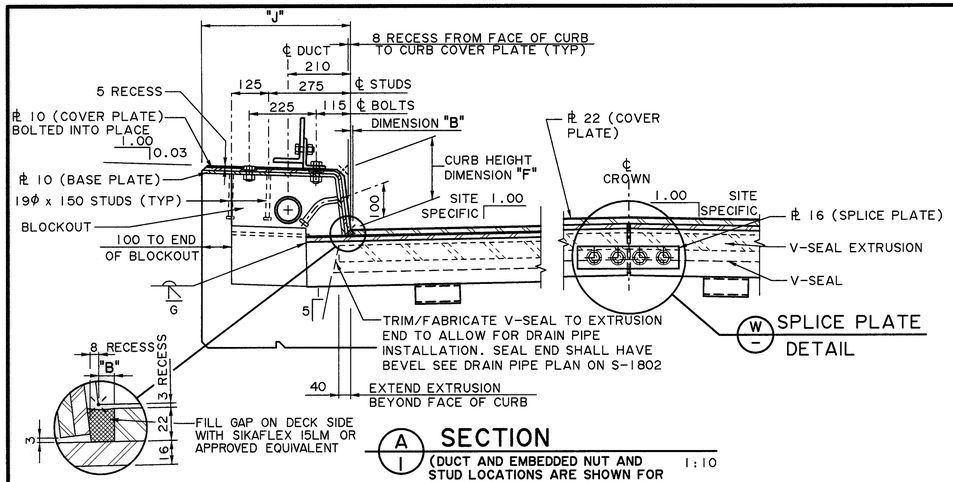

A/1 SECTION

(DUCT AND EMBEDDED NUT AND STUD LOCATIONS ARE SHOWN FOR STANDARD CURB. FOR SINGLE SLOPE CONCRETE BARRIER SEE S-1650) 1:10

FIELD SPLICE NOTES

1. PROVIDE SHOP PREPARED BOLTED SPLICE CONNECTION IN VERTICAL FACE PLATES AT ℄ CROWN. PROVIDE 2 BOLTS EACH SIDE OF SPLICE. ENSURE CONNECTION DOES NOT INTERFERE WITH JOINT OPERATION
2. HORIZONTAL AND VERTICAL PLATES SHALL BE SEALED TO PREVENT LEAKAGE DURING CONCRETE PLACEMENT AND EPOXY INJECTION

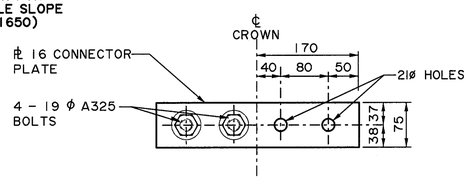

W/- SPLICE PLATE DETAIL

1:5

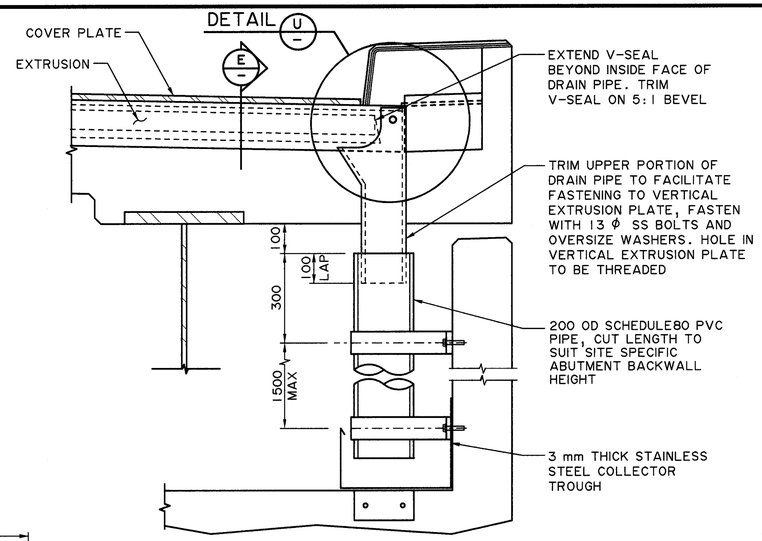

G/- SECTION

1:10

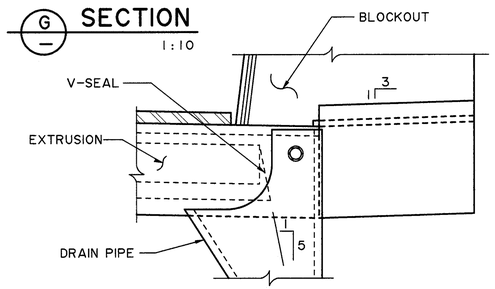

U/- DETAIL

1:5

ABUTMENT

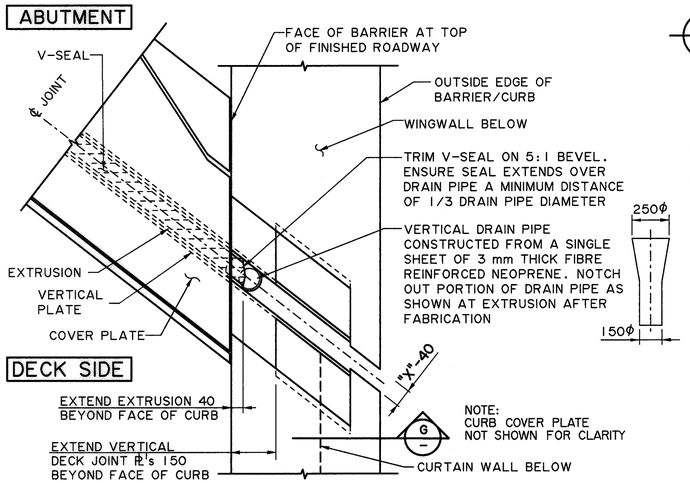

V/1 DRAIN PIPE PLAN

1:10

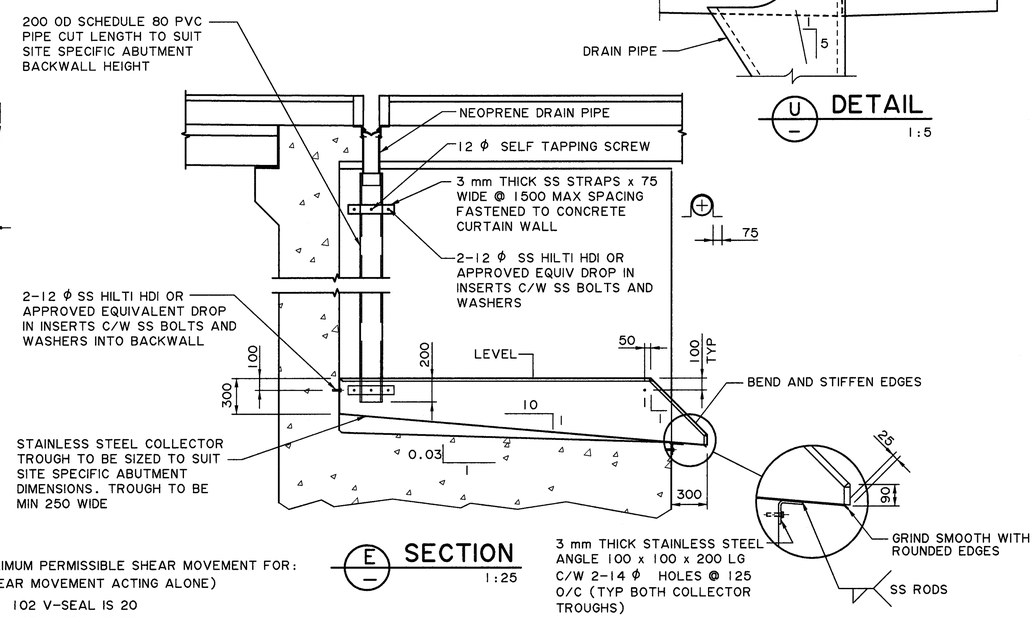

E/- SECTION

1:25

V-SEAL SUMMARY TABLE ⚠

SKEW (DEGREES)	MAXIMUM PERMISSIBLE JOINT MOVEMENT PARALLEL TO ROADWAY (mm)		
	102 SEAL	125 SEAL	178 SEAL
0	30	55	90
10	30	56	91
15	31	57	93
20	32	59	96
25	33	61	99
30	35	64	87
35	37	63	76
40	39	57	68
45	41	51	62
50	38	47	57

- JOINT MOVEMENT VALUES ARE BASED ON A JOINT SETTING TEMPERATURE OF 15°C
- JOINT MOVEMENT VALUES ARE BASED ON MINIMUM AND MAXIMUM EFFECTIVE TEMPERATURES OF -40°C AND +40°C RESPECTIVELY

- MAXIMUM PERMISSIBLE SHEAR MOVEMENT FOR: (SHEAR MOVEMENT ACTING ALONE)
  - 102 V-SEAL IS 20
  - 125 V-SEAL IS 25
  - 178 V-SEAL IS 30
- MAXIMUM PERMISSIBLE MOVEMENT NORMAL TO JOINT FOR: (NORMAL MOVEMENT ACTING ALONE)
  - 102 V-SEAL IS 30 ⚠
  - 125 V-SEAL IS 55 ⚠
  - 178 V-SEAL IS 90
- MAXIMUM GAP "X" FOR A 102 V-SEAL IS 90 ⚠
- MAXIMUM GAP "X" FOR A 125 V-SEAL IS 115 ⚠
- MAXIMUM GAP "X" FOR A 178 V-SEAL IS 150
- JOINTS ON SKEW SHALL HAVE THE SEAL INSTALLED AT THE DECK JOINT SETTING TEMPERATURE TO MAINTAIN ALIGNMENT OF EXTRUSION ENDS

GENERAL NOTES

- REFER TO CONTRACT DRAWINGS FOR DIMENSIONS "A" THROUGH "M" AND "X"
- REINFORCING STEEL IN BLOCKOUT SHALL BE ORIENTATED PARALLEL/PERPENDICULAR TO THE JOINT TO FACILITATE JOINT INSTALLATION

MATERIALS AND FABRICATION

- CONTINUOUS SEALING SYSTEM TO BE ONE OF THE FOLLOWING TYPES:
  - a) DS BROWN A2R-400 AND A2R-XTRA WITH SSCM2 EXTRUSION
  - b) WERCHO 135.100 AND 135.125
  - c) WASTON BOWMAN ACME WABO STRIPSEAL SE 400 AND SE 500 WITH TYPE R EXTRUSION
  - d) GOODCO Z-TECH ZT-500HR SEAL (TREAT AS 125 SEAL) WITH Z-125 EXTRUSION
- ⚠ V-SEALS SHALL BE NEOPRENE
- THE EPOXY INJECTION SYSTEM SHALL BE SELECTED FROM THE MTO DESIGNATED SOURCES FOR MATERIALS (DSM) PUBLICATION #9.40.18
- ALL STEEL SHALL CONFORM TO THE REQUIREMENTS OF CSA G40.21M-300W
- ALL GALVANIZING SHALL MEET ASTM A123 AND ASTM F2329
- ZINC METALLIZING SHALL BE 180 MICRONS THICK AND IN ACCORDANCE WITH CSA G-189
- BOLTS SHALL BE TYPE A325 GALVANIZED UNLESS NOTED OTHERWISE
- ALL EMBEDED THREADED ROD SHALL BE AISI TYPE 316 STAINLESS STEEL
- DECK JOINT BASE AND VERTICAL PLATES AND METAL EXTRUSIONS SHALL BE SUPPLIED IN ONE PIECE ON EACH SIDE OF CENTRELINE CROWN UNLESS NOTED OTHERWISE. V-SEAL SHALL BE SUPPLIED IN ONE CONTINUOUS LENGTH
- ALL METAL PARTS EXCEPT SHIPPING AND ERECTION ANGLES, SHIPPING ANGLE BOLTS AND THREADED ADJUSTMENT RODS SHALL BE HOT DIP GALVANIZED AFTER FABRICATION. ALL DAMAGED GALVANIZING SHALL BE REPAIRED BY METALLIZING
- DECK JOINT SHALL CONFORM TO THE CURRENT REQUIREMENTS OF THE SPECIFICATION FOR BRIDGE CONSTRUCTION SECTION 6 - STRUCTURAL STEEL
- COVER AND BASE PLATES WITH FLAME CUT EDGES SHALL HAVE SURFACE ROUGHNESS NOT EXCEEDING 12.5 μm AS SPECIFIED IN ANSI B46.1
- ALL WELDING SHALL CONFORM TO CURRENT AWS SPECIFICATION D1.5
- ⚠ SHOP ASSEMBLE THE DECK JOINT FOR INSPECTION IN A RELAXED CONDITION WITH SHIPPING AND ERECTION ANGLES REMOVED. THE ASSEMBLY SHALL BE PROPERLY SUPPORTED THROUGHOUT ITS LENGTH FOR CHECKING THE TOLERANCES. THE COVER PLATES SHALL BE CHECKED FOR GAP WITH THE BASE PLATES AT THE -5° C AND +15° C GAP SETTINGS. MAXIMUM ALLOWABLE GAP TOLERANCE BETWEEN COVER PLATE AND BASE PLATE SHALL BE 0.2 mm. TOLERANCES SHALL BE CHECKED BEFORE AND AFTER GALVANIZING
- AFTER VERIFICATION THAT THE PLATE GAP TOLERANCES ARE MET, JOINT IS TO BE SHIPPED WITH THE ASSEMBLY PRE-SET FOR GAP AT +15°C AND SHIPPING ANGLES SECURELY ATTACHED WITH SHIPPING ANGLE BOLTS

INSTALLATION PROCEDURE

- CONTRACTOR TO COORDINATE DECK AND ABUTMENT REINFORCING WITH DECK JOINT ANCHORAGE LOCATIONS TO ENSURE PROPER INSTALLATION OF JOINT WITHOUT CONFLICT & ADJUSTMENT. CONTRACTOR TO NOTIFY CONSULTANT OF ANY CONFLICTS AND RESULTING CORRECTIONS
- ASSEMBLE BOLTED SPLICE IN VERTICAL JOINT PLATES LOCATED AT CENTRELINE CROWN. TAPE VERTICAL AND HORIZONTAL PLATES TO PREVENT LEAKAGE DURING CONCRETE PLACEMENT AND EPOXY INJECTION
- BOLT THE ERECTION ANGLES TO THE SHIPPING ANGLES AND INSTALL THE JOINT ASSEMBLY INTO THE BLOCKOUT. THE SHIPPING ANGLE BOLTS SHALL REMAIN TIGHT. SEAT THE THREADED ROD ON THE ABUTMENT SIDE INTO THE OVERSIZED HOLE LOCATED IN THE TOP OF THE BACKWALL. SEAT THE THREADED ROD ON THE DECK SIDE ONTO THE STEEL PLATE AND PLYWOOD SHIMS. ADJUST THE THREADED RODS SO THE JOINT IS AT THE CORRECT GRADE, CROWN, AND ELEVATION. SET ELEVATIONS BY INSTRUMENT. MAINTAIN FACTORY GAP SETTING "X" UNLESS THE AMBIENT TEMPERATURE VARIES BY MORE THAN +/-10° C FROM THE PRE-SET TEMPERATURE. THE COVER PLATES SHALL BE KEPT IN FULL BEARING WITH THE BASE PLATES AT ALL TIMES
- PROCEED WITH CONCRETE PLACEMENT INTO THE ABUTMENT SIDE BLOCKOUT AFTER APPROVAL HAS BEEN GIVEN BY THE CONSULTANT
- ALLOW THE CONCRETE PLACED INTO THE ABUTMENT SIDE BLOCKOUT TO ACHIEVE A MINIMUM STRENGTH OF 20 MPa
- AFTER THE ABUTMENT SIDE CONCRETE HAS REACHED THE MINIMUM 20 MPa STRENGTH REQUIREMENT, PROCEED WITH CONCRETE PLACEMENT INTO THE DECK SIDE BLOCKOUT AFTER APPROVAL IS GIVEN BY THE CONSULTANT. CONCRETE SHALL BE PLACED INTO THE DECK SIDE BLOCKOUT BETWEEN 12 AM & 2 AM WITH COMPLETION NO LATER THAN 5AM. SHIPPING ANGLE BOLTS SHALL REMAIN TIGHT UNTIL EITHER THE CONCRETE PLACED INTO THE DECK SIDE BLOCKOUT HAS SET OR THE AMBIENT TEMPERATURE BEGINS TO RISE AT WHICH TIME THE SHIPPING ANGLE BOLTS ON THE DECK SIDE SHALL BE LOOSENED JUST ENOUGH TO ALLOW THERMAL MOVEMENT (ABUTMENT SIDE FOR MEDIAN AND CURB)
- CLEAN ANY EXCESS CONCRETE AND DEBRIS FROM DECK JOINT ASSEMBLY
- REMOVE SHIPPING AND ERECTION ANGLES ONCE ALL DECK JOINT BLOCKOUT CONCRETE HAS FULLY CURED
- VERIFY THAT ALL COVER PLATE TO BASE PLATE GAPS MEET TOLERANCE IN THE PRESENCE OF THE CONSULTANT. TOLERANCES TO BE CHECKED AT A TEMPERATURE AT OR NEAR THE TEMPERATURE AT WHICH THE DECK JOINT WAS CAST. IF THE TOLERANCE IS NOT MET, SUBMIT REPAIR PROCEDURE TO THE CONSULTANT FOR APPROVAL.
- REMOVE COVER PLATES AND PRESSURE INJECT EPOXY INTO THE CAST IN INJECTION HOSES IN ACCORDANCE WITH MANUFACTURER'S SPECIFICATIONS AND PROCEDURES
- INITIATE INJECTION FROM ONE END OF A SINGLE 2.0 m MAX LONG INJECTION HOSE SEGMENT. CONTINUE INJECTION UNTIL EPOXY EMITS FROM THE OTHER FITTING OF THE SAME SECTION OF HOSE. ALTERNATE INJECTION BETWEEN EACH END OF THE INJECTION HOSE UNTIL EPOXY EMITS FROM VOIDS IN THE CONCRETE OR THE INTERFACE BETWEEN THE DECK JOINT PLATES AND THE ADJACENT CONCRETE OR BOTH. CONTINUE INJECTION PROCESS WHILE PLUGGING THE FITTING ON THE OTHER END OF THE HOSE UNTIL NO NEW LOCATIONS OF EPOXY SPILLAGE ARE NOTED THEN PLUG OFF THE INJECTION PORTS
- REPEAT THE INJECTION PROCEDURE FOR EACH SECTION OF HOSE UNTIL THE FULL LENGTH OF THE EXPANSION JOINT SYSTEM HAS BEEN FILLED WITH EPOXY. THOROUGHLY CLEAN ALL EXCESS EPOXY PRIOR TO HARDENING
- AFTER EPOXY HAS SET, REMOVE ALL ADAPTERS, FITTINGS, AND PLUGS AND FILL WITH EPOXY. FILL ANY SHIPPING ANGLE BOLT HOLES WITH EPOXY. ENSURE ALL EXCESS EPOXY IS REMOVED FROM PLATE CONTACT SURFACES
- INSTALL V-SEAL AND ALL COVER PLATES. COVER PLATE BOLT INSTALLATION SHALL COMMENCE FROM THE CENTRELINE OF EACH COVER PLATE AND PROCEED OUTWARD TOWARD THE PLATE ENDS. TORQUE COVER PLATE BOLTS USING TURN OF NUT METHOD

SUPERSEDED BY S-1802-11
REVISION 2, 2014-02-20

- WORK THESE DRAWINGS TOGETHER: S-1800, S-1801 AND S-1802

REV	DATE	REVISIONS	BY
5			
4			
3			
2			
1	2012-06-28	MOVEMENT SUMMARY TABLE & NOTES	CM CM

DESIGNER CM CHECKER RY

RECOMMENDED DIRECTOR BRIDGE ENGINEERING

APPROVED EXECUTIVE DIRECTOR TECHNICAL STANDARDS BRANCH

DATE

Government of Alberta ■ Transportation

COVER PLATED V-SEAL DECK JOINT - SHT 3

AI BAR CODE	DATE	SHEET	DRAWING
	2012-01-19	3 OF 3	S-1802-11

NH 2012-01-19 S-1802-11.DGN