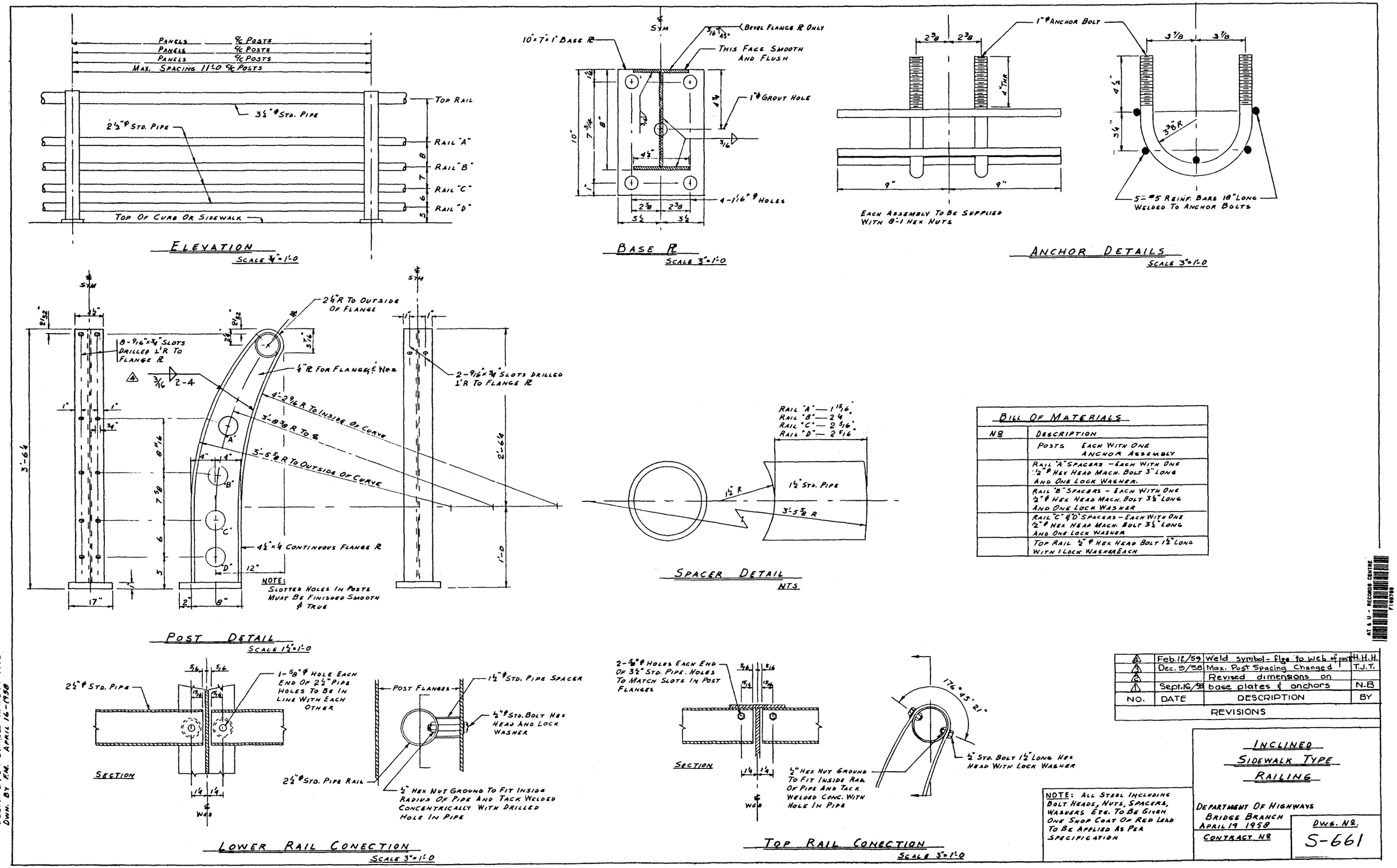

ELEVATION
SCALE ¾"=1'-0

BASE PL
SCALE 3"=1'-0

ANCHOR DETAILS
SCALE 3"=1'-0

POST DETAIL
SCALE 1½"=1'-0

SPACER DETAIL
NTS

Bill Of Materials	
No	Description
	Posts Each With One Anchor Assembly
	Rail "A" Spacers - Each With One ½"φ Hex Head Mach. Bolt 3" Long And One Lock Washer.
	Rail "B" Spacers - Each With One ½"φ Hex Head Mach. Bolt 3½" Long And One Lock Washer
	Rail "C" & "D" Spacers - Each With One ½"φ Hex Head Mach. Bolt 3½" Long And One Lock Washer
	Top Rail ½"φ Hex Head Bolt 1½" Long With 1 Lock Washer Each

LOWER RAIL CONECTION
SCALE 3"=1'-0

TOP RAIL CONECTION
SCALE 3"=1'-0

NO.	DATE	DESCRIPTION	BY
4	Feb. 12/59	Weld symbol - flge to web of post	H.H.H.
3	Dec. 9/58	Max. Post Spacing Changed	T.J.T.
2		Revised dimensions on	
1	Sept. 16/58	base plates & anchors	N.B

REVISIONS

NOTE: All Steel Including Bolt Heads, Nuts, Spacers, Washers Etc. To Be Given One Shop Coat Of Red Lead To Be Applied As Per Specification

INCLINED SIDEWALK TYPE RAILING

Department Of Highways
Bridge Branch
April 19 1958
Contract No

Dwg. No. S-661

Design By J.H. Daniels April 14-1958
Dwn. By F.M. April 16-1958

AT & U - RECORDS CENTRE F190798