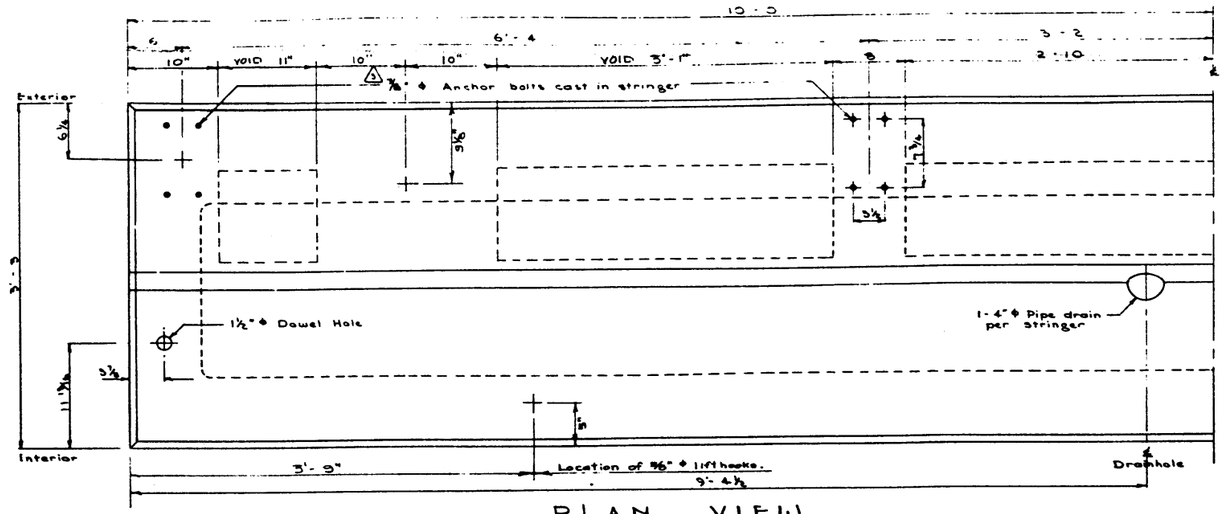

PLAN VIEW

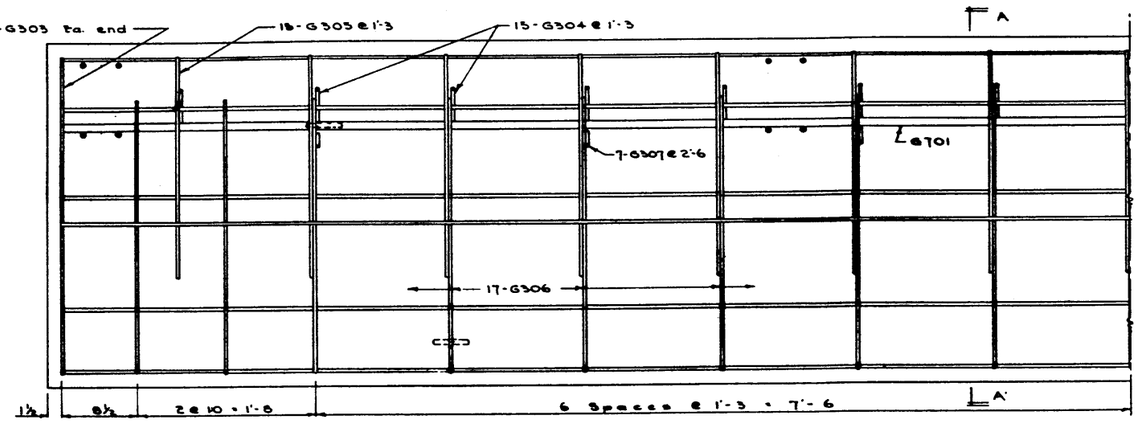

REINFORCEMENT PLAN

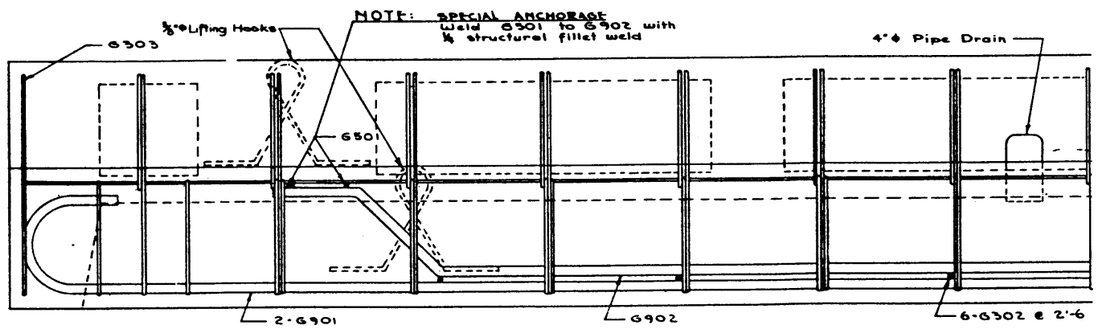

REINFORCEMENT ELEVATION

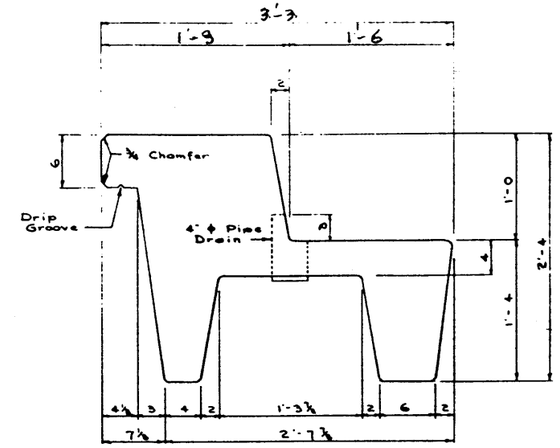

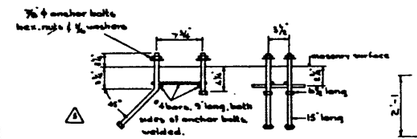

ANCHOR BOLT DETAIL

Scale: 1"=1'-0

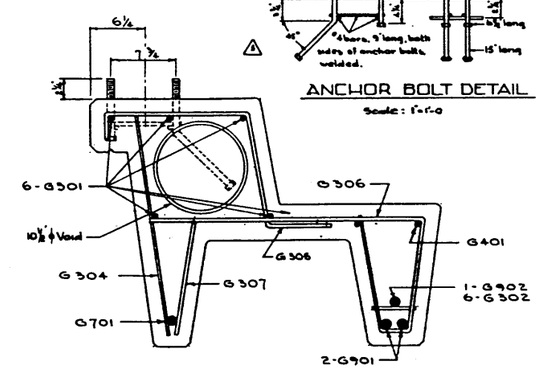

SECTION A-A

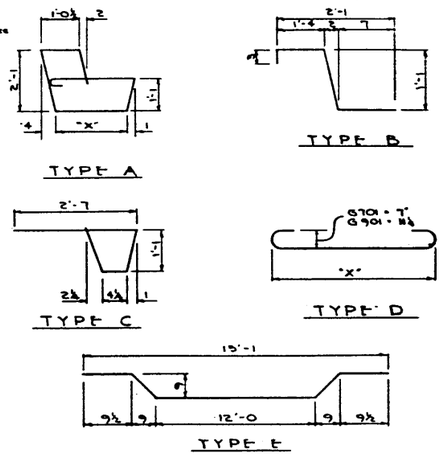

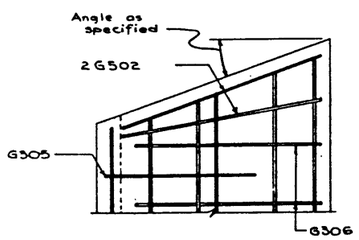

SKEW STRINGER

All other details to conform to those shown for square stringer

On skewed stringers lifting hooks are to be placed 7' 5" from the mid point of the unit (6'-3" on top of curb.)

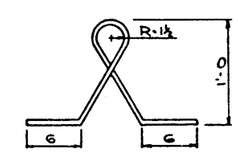

LIFTING HOOK

4 Req'd

BAR LIST

MARK	SIZE	NUMBER	TYPE	"X"	LENGTH	WEIGHT
G301	3	6	Str.		19'-8	44
G302	3	6	Str.		0'-3	1
G303	3	2	A	2'-4	10'-6	8
G304	3	15	Str.		2'-1	12
G305	3	15	B		3'-3	18
G306	3	17	C		5'-0	32
G307	3	7	Str.		1'-1	3
G401	4	1	Str.		19'-8	15
G501	5	4	Str.		1'-0	4
G701	7	1	D	19'-8	21'-4	44
G901	9	2	D	19'-8	22'-2	150
G902	9	1	E		15'-8	53
* G302	3	4	A			

* For Skewed Stringer only

BAR TYPES

All Bar Dimensions Are Out to Out.

GENERAL NOTES

All concrete materials used shall conform to the current applicable A.S.T.M. specifications.
Concrete shall attain a minimum compressive strength of 4000 p.s.i. at 28 days.
Entrained air shall fall within the limits 3% to 6%.
Reinforcing steel shall be intermediate grade conforming to the C.S.A. Specifications G30.1-1954 or G30.2-1954, and deformed to conform to the requirements of G30.6-1954
Concrete Test Cylinders - Test cylinders shall be tested by an independant testing laboratory. Copies of all test results shall be forwarded to the Bridge Branch. Tests shall be at the rate of 1 cylinder for each 2 stringers with not less than 2 cylinders for each days pouring.

(1)

NO.	DATE	DESCRIPTION	BY
4			
3	Oct 8/59	Anchor bolts changed	R.E.
2	May 14/59	Lifting hooks moved.	D.A.L.
1	Feb 2/59	Lifting Hook & Skew Details	S.&W.

REVISIONS

STANDARD CONCRETE
20 FT. TYPE "G" CURB STRINGER

GC - 20

GOVERNMENT OF THE PROVINCE OF ALBERTA
DEPARTMENT OF HIGHWAYS
BRIDGE BRANCH, EDMONTON

FILE NO. ____ HWY. NO. ____ DWG. NO. 5666
LOCATION ____ SCALE 1½" = 1'-0
STREAM ____ SHEET ____ OF ____

DESIGNED BY ____ DATE ____
DETAILED BY S.G.W. DATE MAY 7 '59
CHECKED BY ____ DATE ____