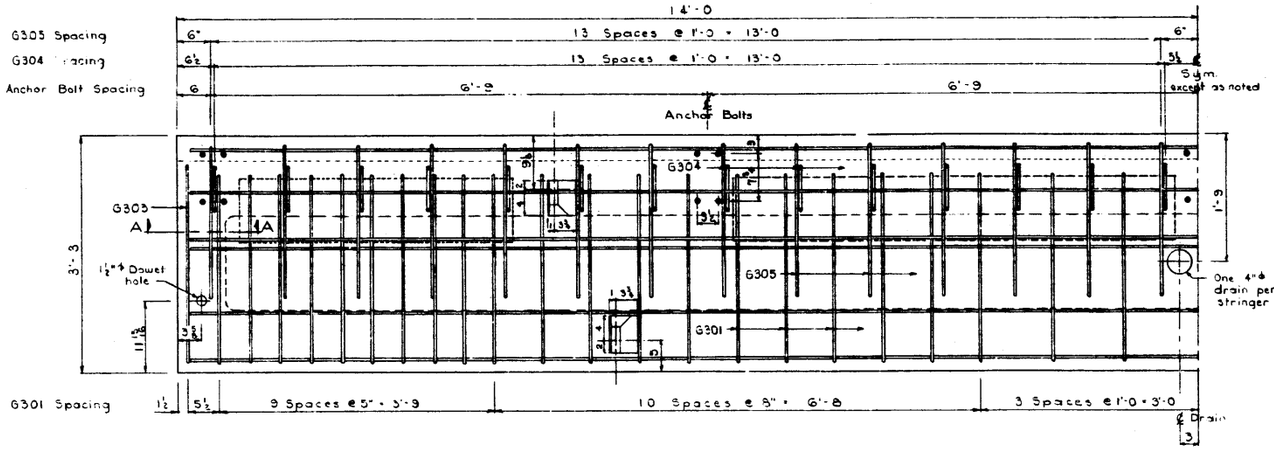

PLAN VIEW

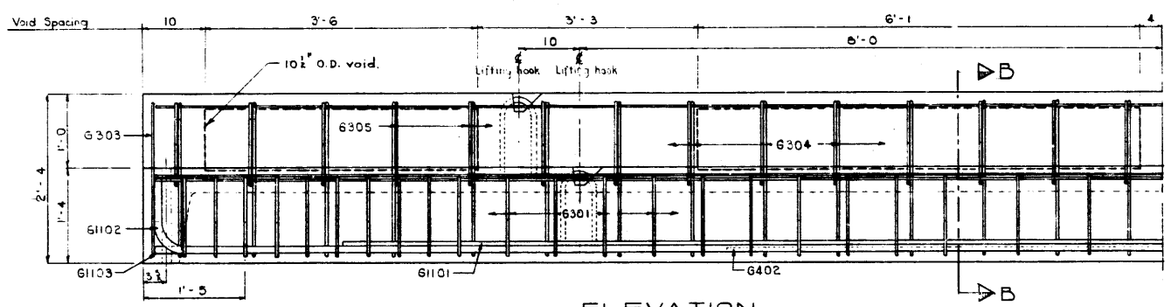

ELEVATION
Scale 1" = 1'-0

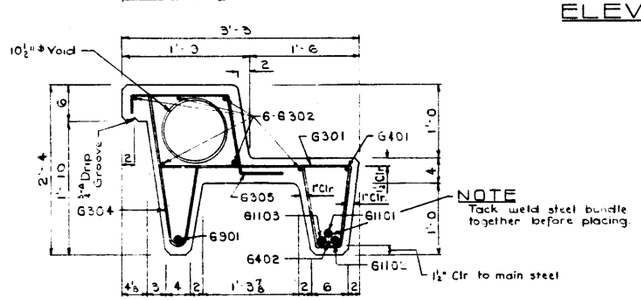

GIRDER SECTION
Scale 1" = 1'-0

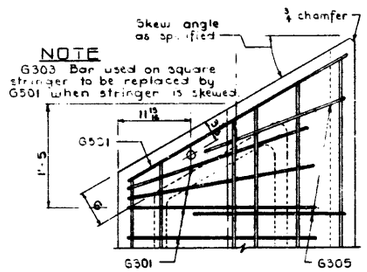

NOTE
G303 Bar used on square stringer to be replaced by G501 when stringer is skewed.

SKEWED STRINGER
All other details to conform to those shown for square stringers.
On skewed units lifting hooks are to be placed 8'-0 (8'-10 on top of curb) from the mid point of the stringer.

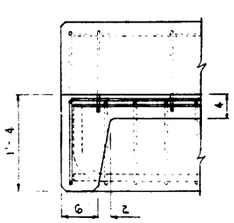

SECTION A-A
Scale 1" = 1'-0

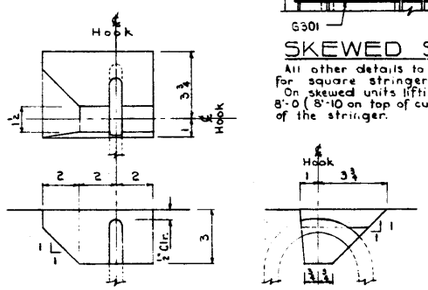

LIFTING HOOK POCKET
Scale 3" = 1'-0

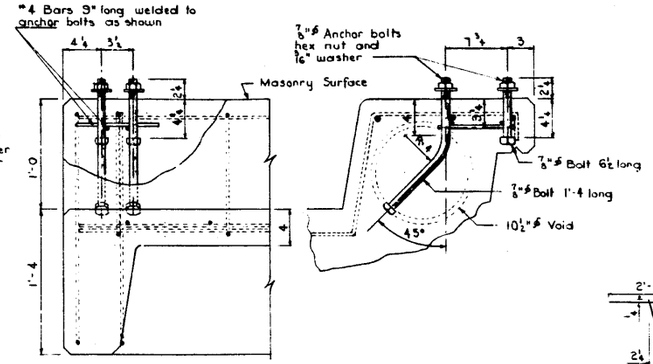

ANCHOR BOLT DETAIL
Scale 1½" = 1'-0

NOTE
Anchor bolt assemblies are to be hot dipped galvanized after fabrication.

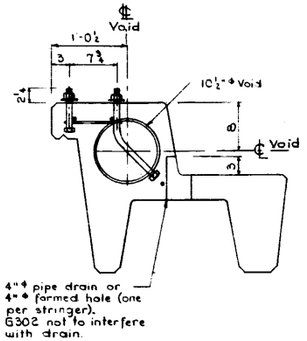

SECTION B-B
Scale 1½" = 1'-0"

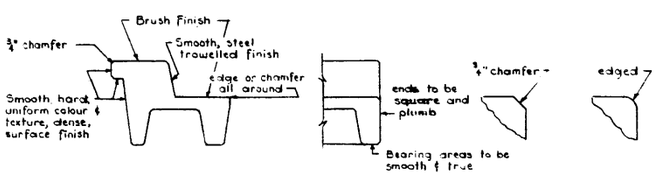

STRINGER FINISHES

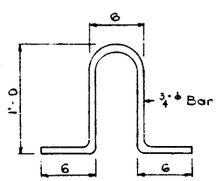

LIFTING HOOK
(OR APPROVED EQUIVALENT)
Scale 1½" = 1'-0

BAR LIST

	Mark	Size	Number	Type	"X"	Length	Weight
	G301	3	45	A		5'-1	86
	G302	3	6	Str		27'-8	62
⊙	G303	3	2	B	2'-4	10'-7	8
	G304	3	28	C		3'-4	35
	G305	3	28	D		3'-3	34
	G401	4	1	Str		27'-8	18
	G402	4	1	Str		12'-0	8
*	G501	5	2	B			
	G901	9	1	E	27'-8	28'-11	98
	G1101	11	1	Str		22'-6	120
	G1102	11	1	E	27'-8	29'-2	155
	G1103	11	1	Str		27'-8	147
						Total Weight	771

⊙ For square stringer only
* For skewed stringer only

BAR TYPES

All bar dimensions are out to out

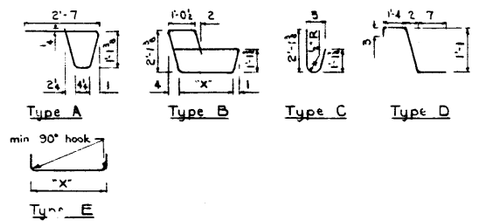

GENERAL NOTES

DESIGN
AASHO 1957 where applicable
Loading H20-S16-44 + full dead load

MATERIALS
All concrete material shall conform to ASTM specifications.
Concrete shall be of lightweight aggregate with max. size of ¾". Min. compressive strength shall be 4500 psi at 28 days
Entrained air shall fall between the limits of 5% and 8%
Reinforcing steel shall be of intermediate grade conforming to the CSA specification G30.1-1954 or G30.2-1954, and deformed steel shall conform to G30.6-1954.

FABRICATION
Concrete must reach 30% of the required 28 day compressive strength before stripping and lifting.
Concrete must reach 65% of the required 28 day compressive strength before shipping.
Each girder shall have a poured camber of 1"
All acute corners on skewed girders to have ¾" chamfer
Diameters of all bends shall conform to the recommended minimums, and all hooks, unless otherwise noted, shall conform to the recommend sizes detailed in A.C.I. Manual of Standard Practice for Detailing Reinforcing Concrete Structures
Concrete test cylinders shall be tested by an independant laboratory, copies of all test results shall be forwarded to the Bridge Branch. Tests shall be taken at the rate of one cylinder for each two stringers with not less than two cylinders for each day's pouring.

All stringers used on main highways shall have standard weight concrete.
Replace G402 - 12'-0 long with G502 - 14'-0 long (*5 bar)
Allowance has been made for 25 p.s.f wearing surface on standard weight stringers.

DESIGNED BY
DETAILED BY S.G.Y. DATE Feb. 1 19 61
CHECKED BY R.E.B. DATE Feb. 19 61

NO.	DATE	DESCRIPTION	BY
4			
3			
2			
1			

REVISIONS

PRECAST CONCRETE 28' SPAN TYPE "GR" CURB STRINGER

GOVERNMENT OF THE PROVINCE OF ALBERTA
DEPARTMENT OF HIGHWAYS
BRIDGE BRANCH, EDMONTON

FILE NO. HWY. NO.
LOCATION SCALE AS SHOWN
STREAM SHEET OF
DWG. NO. 5741