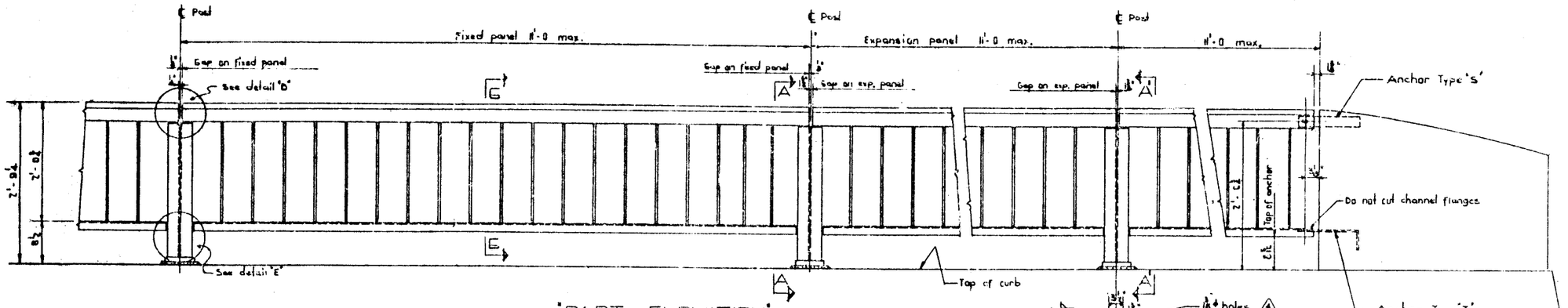

"PART ELEVATION"
Scale 1" = 1'-0

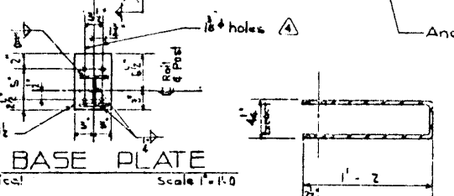

BASE PLATE
Typical
Scale 1" = 1'-0

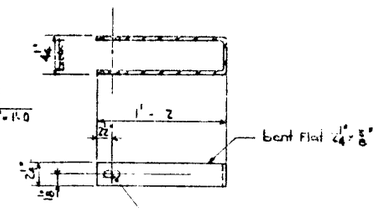

ANCHOR TYPE "S"
Scale 1½" = 1'-0

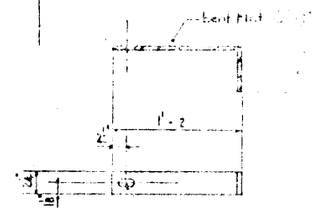

ANCHOR TYPE "T"

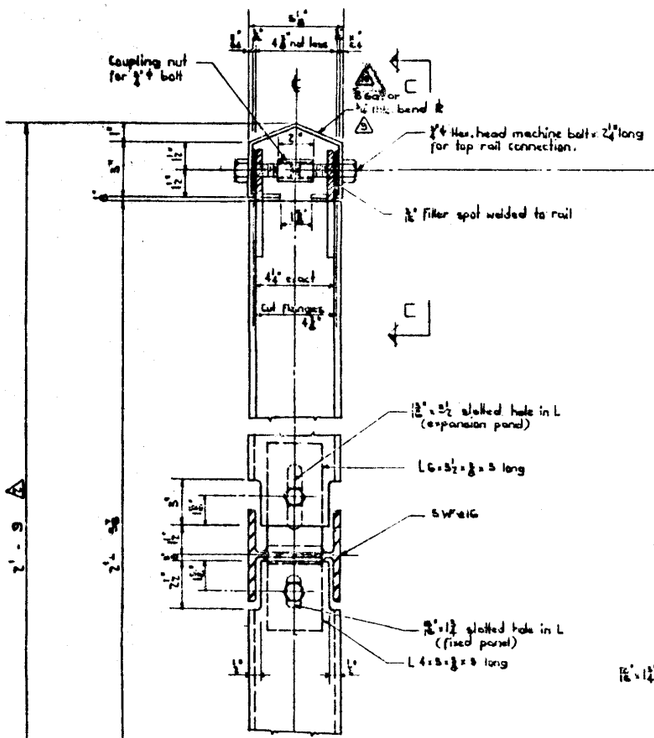

SECTION "B—B"

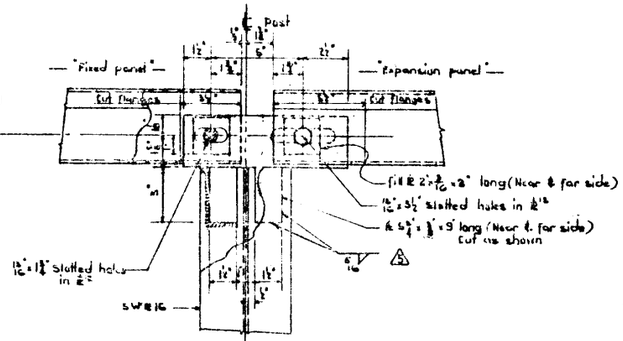

VIEW "C—C"
Scale 3" = 1'-0

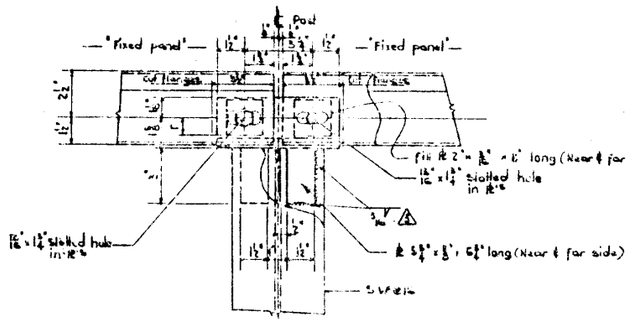

DETAIL "D"
Scale 3" = 1'-0

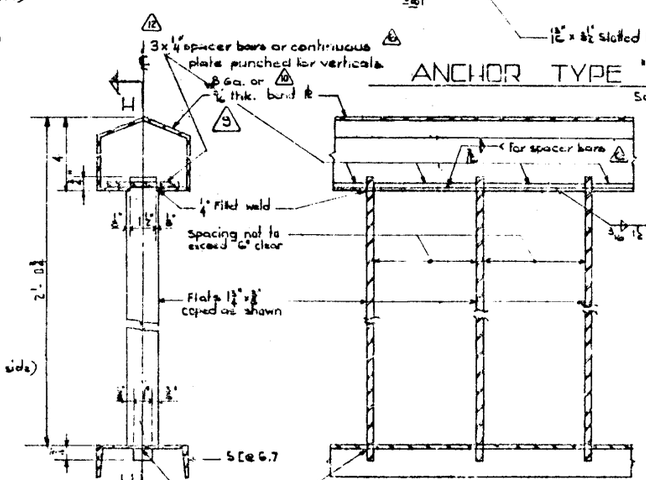

SECTION "G—G"
Scale 3" = 1'-0

SECTION "H—H"
Scale 3" = 1'-0

Note: slotted holes in anchors must be finished smooth and true.

GENERAL NOTES:

- All handrail and posts to be given one shop coat red lead or zinc chromate type paint conforming to the requirements of the Canadian Government Specification Board Specification 1-GP-140 m.
- All steel shall conform to the current A.S.T.M. Specification A 36.
- All shop splices are to be shown on the shop drawings.
- Fabrication is to be in accordance with the A.S.C.S. Specifications for Highway Bridges, 1961 edition.
- The Fabricator shall submit shop drawings and [illegible] for approval by the Department. Approval of fabrication is [illegible] checking of shop drawings [illegible] be viewed as [illegible] Fabricator [illegible] of responsibility [illegible] or omissions.

SUPERSEDED

SUPERSEDED (3)

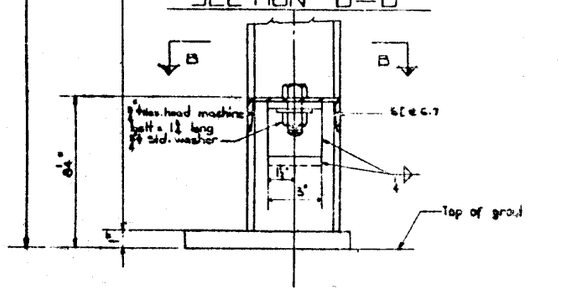

SECTION "A—A" as shown
Scale 3" = 1'-0

SECTION "A—A" same as shown except base ℄ projects to the right.

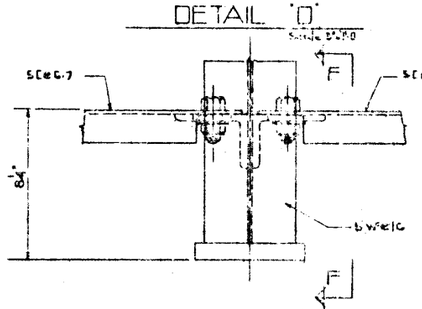

DETAIL "E"
Scale 3" = 1'-0

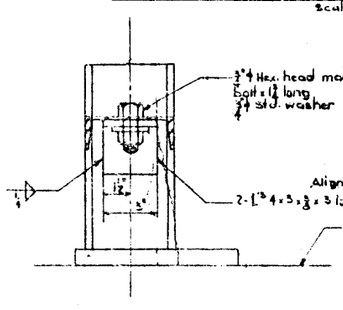

SECTION "F—F"
Scale 6" = 1'-0

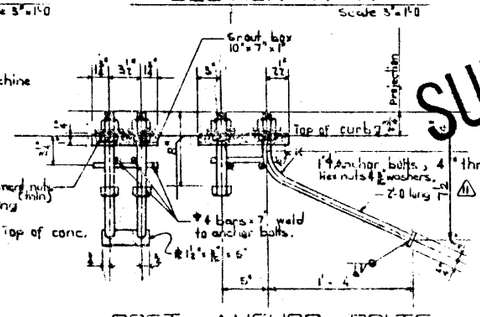

POST ANCHOR BOLTS
Scale 1½" = 1'-0
Note: Anchor bolt assemblies to be hot dip galvanized after fabrication.

No.	Date	Description	By
4	Jan. 20/65	Bar width added	V.G.B.
3	June 30/64	Anchor bolt dim. changed	E.G.F.
2	June 26/64	6 Ga. added	E.G.F.
1	Feb. 7/64	E.G.F. changed to 6 Ga.	E.G.F.

REVISIONS

No.	Date	Description	By
4	Dec. 4/63	Note changed	B.G.S.
3	July 2/63	Fabrication notes added	D.M.P.
2	July 2/63	Spacer bar alternate added	R.E.B.
1	April 8/63	Top ℄ Hold	E.G.S.

REVISIONS

No.	Date	Description	By
4	June 3/62	Base plate hole to 1¼" ϕ	B.G.S.
3	April 1962	Post anchor bolts revised	L.K.
2	Feb. 6/62	Allowance made for grout pocket	L.K.
1	Nov. 7/61	Redrawn	L.K.

REVISIONS

2'-9 HIGHWAY VERTICAL BAR TYPE HANDRAIL DETAIL

GOVERNMENT OF THE PROVINCE OF ALBERTA
DEPARTMENT OF HIGHWAYS
BRIDGE BRANCH, EDMONTON

File No. — H.W. No. — Drawn
Local No. — Scale — Date
Checked — Date

S-752