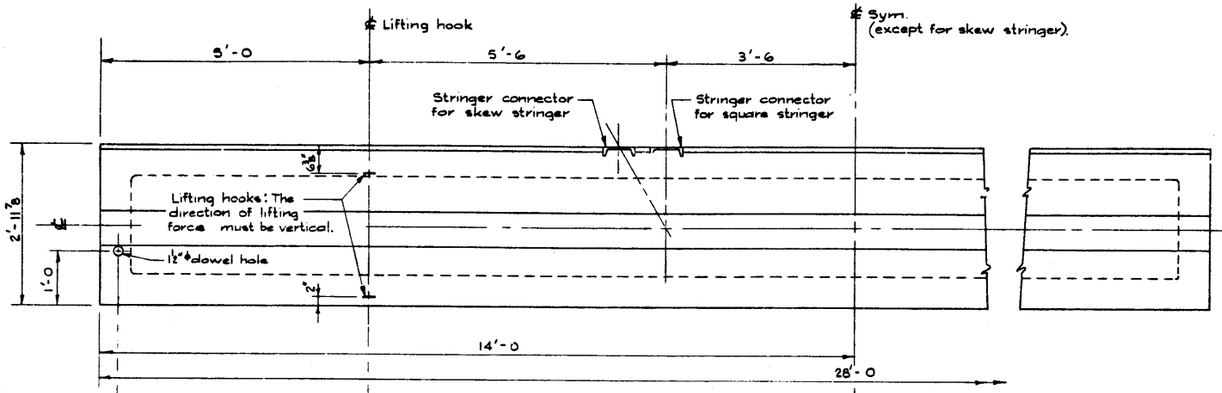

PLAN
Scale: ¾" = 1'-0

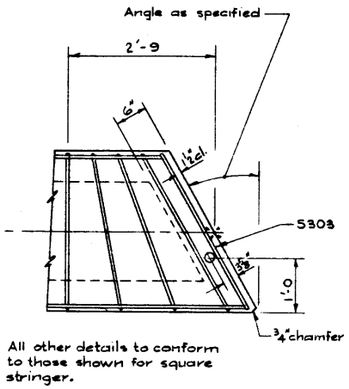

SKEW STRINGER
Scale: ¾" = 1'-0

BAR LIST

Mark	Size	No.	Type	X	Y	Length	Weight
S 301	3	56	A			3'-6	37
S 302	3	28	B			3'-5	36
S 401	4	7	Str.			27'-8	129
S 601	6	28	C			4'-9	207
G 301	3	4	D			3'-7	5
G 401	4	28	Str.			2'-8	50
G 402	4	2	Str.			27'-8	37
G 901	9	2	E			28'-11	197
G 902	9	2	Str.			21'-0	145
* S 303	3		F				
T 301	3	14	G			1'-9	9

* For skew stringer only — Total lbs: 850

BAR TYPES
N.T.S.
(All bar dimensions are out to out).

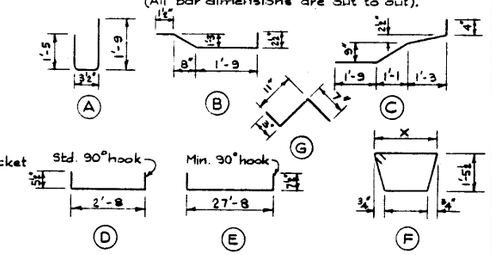

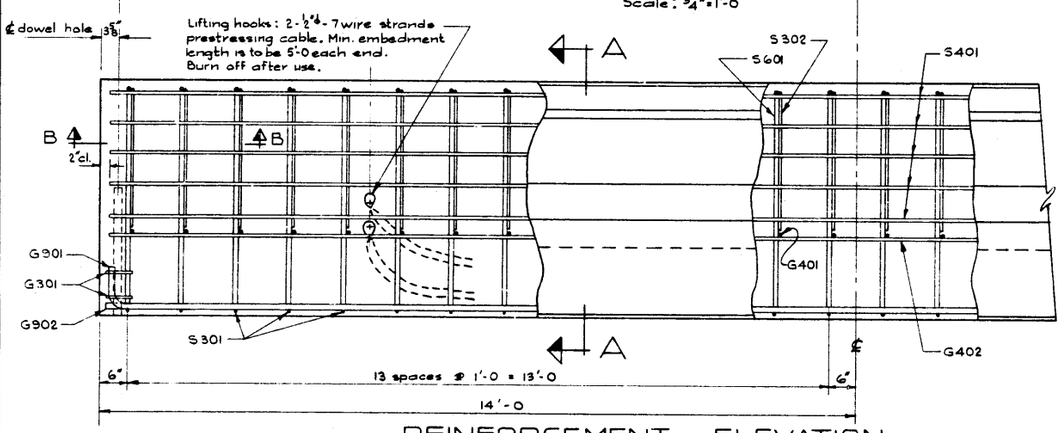

REINFORCEMENT ELEVATION
Scale: ¾" = 1'-0

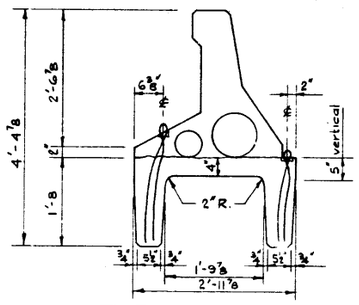

TYPICAL SECTION
Scale: ¾" = 1'-0

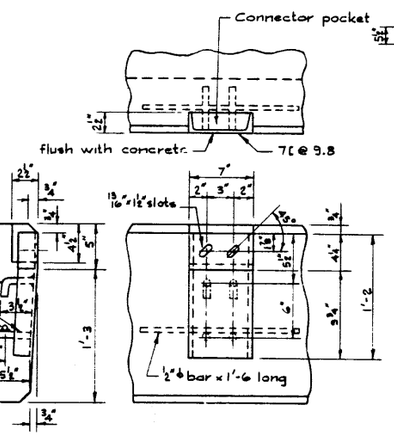

STRINGER CONNECTORS
Scale: 1½" = 1'-0

GENERAL NOTES

DESIGN:
- Live Load - A.A.S.H.O. HS20-44 modified as shown.
- Concrete - to be light weight aggregates with maximum aggregate size of ¾ inch. Minimum 28 day compressive strength to be 4000 p.s.i. The unit weight of the concrete shall be 105 pounds per cubic foot plus or minus 5% when unit weight is determined in conformity with the requirements of the specification A.S.T.M. C330.

CONSTRUCTION:
- Entrained air shall be between 3% & 8%.
- Diameters of all bends shall conform to the recommended minimums and all hooks, unless otherwise noted shall conform to the recommended sizes detailed in the A.C.I. Manual of Standard Practice for Detailing Reinforced Concrete Structures.
- Each stringer shall have a cast camber of ¾ inch.
- All acute angles on skewed stringers shall have ¾" chamfer.
- Concrete shall attain at least 80% of the specified 28 day compressive strength before the units are stripped from the forms or lifted.
- Each connector is to be supplied with one ¾" ϕ x 2" H.T. bolt, one heavy hex semi finished nut and three hardened washers.

ERECTION
- Any free space between the connectors shall be filled with washers.
- Lifting force at each hook must be vertical at all times. Stringer surface must be level at all times.

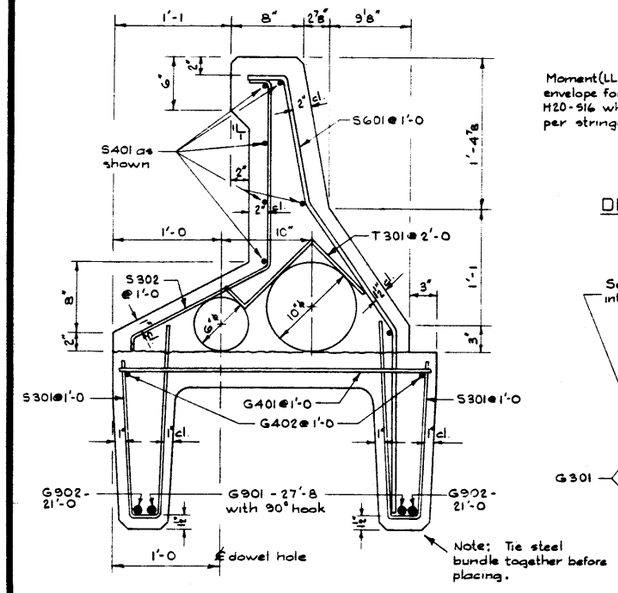

SECTION A—A
Scale: 1½" = 1'-0

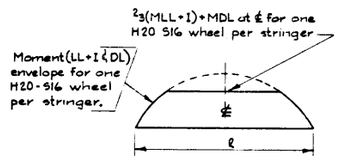

DESIGN LIVE & DEAD LOAD MOMENT ENVELOPE
N.T.S.

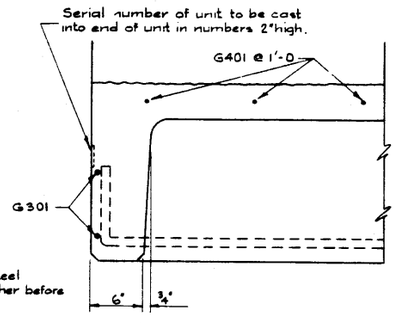

SECTION B—B
Scale: 1½" = 1'-0

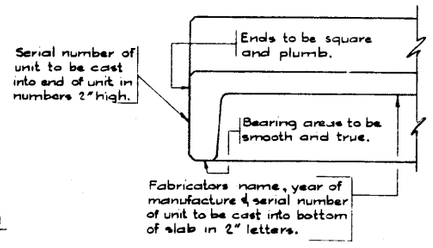

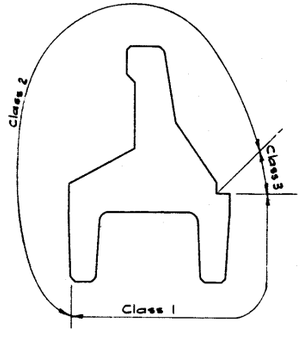

STRINGER FINISHES
Scale: ¾" = 1'-0

NO.	DATE	DESCRIPTION	BY
A			
B			
C			
D			

REVISIONS

PRECAST CONCRETE PARAPET
28 FT. SPAN TYPE 'HC'

GOVERNMENT OF THE PROVINCE OF ALBERTA
DEPARTMENT OF HIGHWAYS
BRIDGE BRANCH, EDMONTON

FILE NO. ____ HWY. NO. ____ DWG. NO. S-910
LOCATION ____ SCALE ____
STREAM ____ SHEET ____ OF ____

DESIGNED BY T. Belke DATE April 1966
DETAILED BY V. Boychuk DATE April 1966
CHECKED BY ____ DATE ____