SPECIFICATIONS FOR BRIDGE CONSTRUCTION

SECTION 7

PRECAST CONCRETE UNITS

TABLE OF CONTENTS

7.1 General 7-1

7.2 Supply and Manufacture 7-1
- 7.2.1 Standards 7-1
- 7.2.2 Qualification 7-1
- 7.2.3 Engineering Data 7-1
  - 7.2.3.1 Shop Drawings 7-1
  - 7.2.3.2 Stressing Calculations 7-2
  - 7.2.3.3 Stressing Steel Certificate 7-2
  - 7.2.3.4 Concrete and Grout Mix Design 7-2
  - 7.2.3.5 Other Data 7-2
  - 7.2.3.6 Construction Data Sheets 7-3
- 7.2.4 Materials 7-3
  - 7.2.4.1 Cement 7-3
  - 7.2.4.2 Water 7-3
  - 7.2.4.3 Silica Fume 7-3
  - 7.2.4.4 Aggregates 7-3
  - 7.2.4.5 Air Entraining Agent 7-3
  - 7.2.4.6 Chemical Admixtures 7-4
  - 7.2.4.7 Concrete 7-4
  - 7.2.4.8 Reinforcing Steel 7-4
  - 7.2.4.9 Stressing Strand 7-4
  - 7.2.4.10 Lifting Hooks 7-5
  - 7.2.4.11 Miscellaneous Steel 7-5
  - 7.2.4.12 Bridgerail and Anchor Bolts 7-5
  - 7.2.4.13 Voids and Ducts 7-5
  - 7.2.4.14 Bearings 7-5
  - 7.2.4.15 Galvanizing 7-6
- 7.2.5 Manufacture 7-6
  - 7.2.5.1 Forms 7-6
  - 7.2.5.2 Reinforcing Steel 7-6
  - 7.2.5.3 Stressing Strand 7-6
  - 7.2.5.4 Void and Duct Placement 7-7
  - 7.2.5.5 Identification of Units 7-7
  - 7.2.5.6 Concrete Measuring, Mixing and Placing 7-7
  - 7.2.5.7 Concrete Temperature 7-7
  - 7.2.5.8 Finished Riding Surface 7-8
  - 7.2.5.9 Camber Hubs 7-8

7.2.5.10 Concrete Finish....7-8
7.2.5.11 Curing....7-9
7.2.5.12 Release of Stressing Strand....7-11
7.2.5.13 Repairing Damaged Concrete....7-11
7.2.5.14 Type 1c Sealer....7-12
7.2.5.15 Sandblasting....7-13
7.2.5.16 Dimensional Tolerances of Cast Units....7-13
7.2.5.17 Handling and Storage....7-13
7.2.6 Testing and Inspection....7-14
7.2.6.1 Access....7-14
7.2.6.2 Inspection....7-14
7.2.6.3 Test Methods....7-14
7.2.6.4 Testing by the Contractor....7-15
7.2.6.5 Release Strength Test Cylinders....7-15
7.2.6.6 28 Day Strength Testing....7-15
7.2.6.7 Fabrication of Prestressed/Precast Units in Cold Weather....7-15
7.2.7 Failure to Meet Strength Requirements....7-16
7.2.7.1 Right of Rejection....7-16
7.2.7.2 Percentage Payment Schedule....7-16
7.2.7.3 Coring....7-16

7.3 Erection of Precast Concrete Girders....7-17
7.3.1 General....7-17
7.3.2 Handling and Storing Materials....7-17
7.3.3 Temporary Supporting Structures and Berms....7-18
7.3.4 Review of Erection Procedure....7-18
7.3.5 Girder Adjustments....7-19
7.3.6 Grout Pockets and Grout Pads....7-20
7.3.7 Grouting in Cold Weather....7-20
7.3.8 Bearings and Anchorage....7-20
7.3.9 Assembly....7-21
7.3.10 Lifting Hooks and Lifting Holes....7-21
7.3.11 Painting of Metal Parts....7-21
7.3.12 Post-Tensioning System....7-21
7.3.12.1 General....7-21
7.3.12.2 Standards....7-21
7.3.12.3 Qualification....7-22
7.3.12.4 Submittals....7-22
7.3.12.5 Materials....7-22
7.3.12.6 Equipment....7-24
7.3.12.7 Construction....7-24
7.3.12.8 Inspection....7-26
7.3.13 Removal of Temporary supporting structures and Site Clean-up....7-27

7.4 Payment....7-27

REFERENCE DRAWING....Drawing No.

Type 1c Sealer for Precast Girders....S-1637-97

7.1 General

This specification is for the supply, manufacture, delivery and erection of prestressed and precast concrete bridge units and miscellaneous precast components.

7.2 Supply and Manufacture

A pre-fabrication meeting is required prior to commencement of fabrication of precast concrete elements. The meeting will be held at fabricator's plant and the Contractor shall ensure the plant superintendent and plant manager responsible for the work and any manufacturer's representatives directly involved in the specialized work are in attendance. The Department/Consultant will conduct this meeting after the shop drawings have been approved. The Contractor shall provide two weeks notice to the Department/Consultant prior to the meeting.

7.2.1 Standards

The manufacture of prestressed and precast concrete bridge units shall be in accordance with The Canadian Standards Association (CSA) Standard A23.4.

Where imperial/metric conversions are necessary, The National Standard of Canada, CAN3-Z234.1-79 shall be used as the basis of conversion.

7.2.2 Qualification

The Contractor shall notify the Department and Consultant of any subcontractors in his employ. The Contractor shall remain responsible for the work of the subcontractors. All terms of the contract, such as right of access, shall apply to the subcontractor.

The fabricator shall operate a recognized precast concrete fabricating plant and be fully certified by the Canadian Precast/Prestressed Concrete Institute (CPCI) Certification Program.

7.2.3 Engineering Data

7.2.3.1 Shop Drawings

Five copies of the shop drawings showing all necessary fabrication details of the precast units, such as reinforcing steel, blockouts, stressing system, anchorage devices, void support system and screed rail shall be submitted to the Consultant for review and acceptance prior to manufacturing. The shop drawings shall be legible and of adequate quality to be reproduced and microfilmed. Each drawing shall have a sufficient blank space for the Consultant's acceptance stamp. The Consultant's acceptance of the shop drawings shall not be construed as relieving the Contractor from his responsibility for errors or omissions. All shop drawings will be stamped as follows:

"This acceptance applies to general arrangements and details of design but not to dimensions or details of fabrication and is subject to the requirements of specifications and to such corrections as may be marked here on."

Fabrication shall not commence prior to the acceptance of the shop drawings.

Alberta Transportation bridge file number and project name shall be shown on shop drawings.

7.2.3.2 Stressing Calculations

Four copies of the stressing calculations showing elongations and gauge pressures as well as the strand release sequence data shall be submitted to the Consultant for review and acceptance prior to manufacturing. Jack calibrations, performed within the previous six months, shall be included.

7.2.3.3 Stressing Steel Certificate

A copy of the load/elongation curve for each lot of stressing steel shall be submitted to the Consultant for acceptance prior to manufacturing.

7.2.3.4 Concrete and Grout Mix Design

A copy of the concrete mix design and the grouting mortar mix design shall be submitted to the Consultant for acceptance prior to manufacturing. The mix design shall indicate the design strength, proportions of the constituent materials, type and brand of cement, type and brand of silica fume, origin of aggregates and brand names of all admixtures.

The sampling and testing of aggregates, and the concrete mix design shall be completed by an independent CSA certified and qualified concrete testing laboratory which shall have a permit to practice in the Province of Alberta. Concrete mix designs including sampling and testing of aggregates may be completed by the concrete supplier, with the condition that documentation is stamped by a Professional Engineer registered in the Province of Alberta. For either situation, the mix design, including sampling and testing, shall be reviewed and stamped for compliance with the respective specifications by an independent CSA certified and qualified concrete testing laboratory having a permit to practice in the Province of Alberta. For either case, the testing laboratory shall provide an engineering opinion that the concrete aggregate and mix designs are suitable for the intended use and are expected to perform to specified standards.

The mix design shall include one microscopic air-void analysis performed by an independent testing laboratory in order to determine the spacing factor of the hardened concrete. The test sample shall be made from a trial concrete batch, vibrated into a cylinder mould so as to represent the level of vibration of the production concrete in the forms. If adjustments to the mix design are necessary, the air-void analysis shall be repeated.

Only the accepted mix design shall be used to cast units. Changes in cement type, and/or decreasing cement content shall be construed as a change in mix design and will not be allowed.

7.2.3.5 Other Data

The Consultant may request test data to prove conformance to the standards for other materials including cement, silica fume, aggregate and admixtures.

7.2.3.6 Construction Data Sheets

During manufacture, the Construction Data Sheets shall be kept up to date and available for the Consultant's inspection. Copies of the data sheets shall be provided to the Consultant upon completion of the contract. One copy of the stressing data sheets for each bridge unit shall also be submitted with the Construction Data Sheets.

7.2.4 Materials

7.2.4.1 Cement

Hydraulic cement conforming to the requirements of CSA Standard A3001 shall be used.

7.2.4.2 Water

Water to be used for mixing concrete or mortar shall conform to the requirements of CSA Standard A23.1 and shall be free from injurious amount of alkali, organic materials or deleterious substances. The Contractor shall not use water from shallow, stagnant or marshy sources.

7.2.4.3 Silica Fume

10% condensed silica fume by weight of cement (± 0.5%) shall be used in all precast concrete. Condensed silica fume shall conform to the requirements of CSA Standard A3001 for a Type SF supplementary cementing material, with a SiO_2 content of at least 85%, a maximum loss on ignition of 10% and no more than 1% SO_3 content. An acceptable, compatible, superplasticizing admixture shall be used together with the silica fume.

7.2.4.4 Aggregates

Aggregate tests shall be performed and submitted to the Consultant for review with the concrete mix design as per section 4.4.4.

(a) Standard Weight Aggregates
Fine and coarse standard weight aggregates shall conform to the requirements of CSA Standard A23.1, with maximum aggregate size of 14 mm.

(b) Lightweight Aggregates
Fine and coarse lightweight aggregates shall conform to the requirements of the ASTM Standard C330, with maximum aggregate size of 14 mm.

7.2.4.5 Air Entraining Agent

Air entraining agent shall conform to the requirements of the ASTM Standard C260.

7.2.4.6 Chemical Admixtures

Chemical admixtures shall conform to the requirements of ASTM Standard C494 and shall be accepted by the Consultant. All chemical admixtures must be suitable for use in precast concrete, be supplied by the same manufacturer as the air entrainment agent, and be compatible with each other. The addition of calcium chloride, retarders, accelerators or set controlling admixtures and air reducing agents will not be permitted.

Acceptable admixtures are air-entraining agents, superplasticizers and water-reducing agents.

7.2.4.7 Concrete

Concrete shall consist of hydraulic cement, condensed silica fume, aggregates, water and acceptable admixtures. The type of concrete to be used will be specified on the drawings.

The density, entrained air and air void spacing requirements for the various types of concrete are specified in Table 7.1.

Table 7.1

Type of Concrete	**Aggregates**	**Concrete Unit Weight (in plastic state) kg/m^3**	**Minimum Entrained Air %**	**Maximum Air Void Spacing (hardened concrete) mm**
Standard Weight	Fine and Coarse Standard Weight	--	5	0.23
Lightweight	Fine and Coarse Lightweight	1680 ± 5%	6	0.23
Semi-Lightweight	Fine Standard Weight & Coarse Lightweight	1920 ± 5%	6	0.23

7.2.4.8 Reinforcing Steel

Plain and epoxy coated reinforcing steel shall conform to the Bridge Construction Specifications – Section 5 - Reinforcing Steel.

7.2.4.9 Stressing Strand

Stressing strand shall be uncoated Grade 1860, low relaxation 7-wire strand conforming to the requirements of the ASTM Standard A416. Shop drawings and stressing calculations shall clearly show the type of strand to be used, and changes will not be allowed during production.

7.2.4.10 Lifting Hooks

Lifting hooks made of stressing strand shall conform to the requirements of the ASTM Standard A416, and shall be fabricated in a manner that distributes the load evenly to all strands.

7.2.4.11 Miscellaneous Steel

Miscellaneous steel shall conform to the requirements of the CSA Standard CAN/CSA G40.21M-300W or ASTM Standard A36 or as specified on the drawings. The Consultant may request the Contractor to provide mill certificates to prove conformance to the standard. Fabrication shall conform to the Bridge Construction Specifications - Section 6 - Structural Steel.

7.2.4.12 Bridgerail and Anchor Bolts

Bolts for bridgerail anchor assemblies shall be as per section 12.2.4.2. The assemblies shall be hot dip galvanized after fabrication. All nuts and washers shall be shop assembled on the anchor bolts.

7.2.4.13 Voids and Ducts

All void and duct material must be accepted by the Consultant and remain dimensionally stable during the casting and steaming of the units. Voids shorter than 400 mm should be eliminated except when noted otherwise on the drawings.

7.2.4.14 Bearings

Certified mill test reports for all bearing material shall be provided prior to installation.

(a) Stainless Steel
Stainless Steel shall conform to the requirements of American Iron and Steel Institute (AISI) Standard Type 304, No. 8 Mirror Finish.

(b) Elastomer
Elastomer shall conform to Section 18 “Bearings” Division II of the AASHTO Standard Specifications for Highway Bridges 2002 edition. Elastomer compound shall conform to low temperature AASHTO grade 5 material testing requirements in Table 18.4.5.1-1A and -1B at the specified hardness.

(c) Teflon
Teflon shall be unfilled, 100% virgin polymer.

(d) Base Plate Corrosion Protection
Bearing base plate corrosion protection shall be as per section 12.2.6.8.

7.2.4.15 Galvanizing

Galvanizing shall be by the hot dip method, after fabrication, in accordance with the current edition of ASTM A123/A123M Standard Specification for Zinc (Hot-Dip Galvanized) Coatings on Iron and Steel Products and ASTM A153/A153M Standard Specification for Zinc Coating (Hot-Dip) on Iron and Steel Hardware with additions and exceptions as described in this specification. The Fabricator shall provide a smooth finish on all edges and surfaces, and remove all weld spatters and all welding flux residue from the steel components prior to galvanizing.

Repair of galvanizing shall only be done if bare areas are infrequent, small and suitable for repair. A detailed repair procedure shall be submitted and accepted prior to its use. It should be noted that repairs may require complete removal of the galvanized coating and regalvanizing. Repair shall be in compliance with ASTM A780, Method A3 Metallizing. The thickness of the metallizing shall be 180 µm, and the repair tested for adhesion. The finished appearance shall be similar to the adjacent galvanizing. The Consultant will determine the acceptability of repaired areas.

7.2.5 Manufacture

7.2.5.1 Forms

Precast concrete units are to be manufactured in steel forms accepted by the Consultant.

For all beam members the forms shall be designed to be removed without damaging the beam. For all “I” or “T” Beam members the side forms shall be designed to be removed without damaging the top flange of the beam. The forms shall be removed horizontally away from the beam by a method that prevents any contact of the form with the top flange after release of the form. The top flange shall not be subjected to a vertical force at any time.

Holes or voids cast into the top flange of “I” or “T” girders to accommodate deck formwork, will not be permitted.

7.2.5.2 Reinforcing Steel

Fabrication, handling, storage, placement and fastening of all steel reinforcement shall conform to the Bridge Construction Specifications - Section 5 - Reinforcing Steel.

Reinforcement shall be placed, secured and inspected for acceptance by the Consultant prior to placement of concrete.

7.2.5.3 Stressing Strand

Stressing strand shall be free of corrosion, dirt, grease, rust, oil or other foreign material that may impede bond between the steel and the concrete. Stressing strand shall be protected at all times from manufacture to encasing in concrete or grouting. Stressing strand that has sustained physical damage at any time shall be rejected. Stressing strand splices shall not be placed within a precast concrete unit.

The Contractor shall submit for review and acceptance the methods, procedures and devices to accurately position the stressing strand. The submission shall include strand anchorage, draping, hold downs, guides or any other required devices.

Stressing strands shall not be stressed more than 36 hours prior to being encased in concrete. The stress in the stressing strands shall be measured both by jacking gauges and by elongation of the strands. The maximum allowable discrepancy between jack pressure and elongation shall be within 5%, or the factors contributing to the difference must be identified and corrected before proceeding. Changes in strand temperature and slippage at strand anchorages shall be measured between stressing and concrete encasement and any changes in strand stress due to these effects shall be accounted for in the design.

Seven wire stressing strand with any broken wire shall be removed and replaced. All stressing strands shall be checked for wire breaks before placement of concrete.

The precast unit ends shall have 15 mm deep strand termination recesses formed around the strands. All strands shall be cut flush with the bottom of the recesses, and the recesses shall then be cement mortar grouted flush with the ends of the precast units. An approved Type 1c sealer shall be applied over the patched recessed areas as per section 7.2.5.14. Sealer shall not be applied to the patched recessed areas when precast unit ends are designed to be encased in field cast concrete.

The Contractor shall be responsible for recording and reporting the elongation, and tension of each strand during the stressing operation.

7.2.5.4 Void and Duct Placement

Voids and ducts shall be placed as shown on the drawings and must be tied and securely held in the required positions to prevent movement. Continuous ducts shall align precisely. The ends of the voids shall be sealed by methods accepted by the Consultant. Voids found to be distorted, damaged or of insufficient strength will be rejected. Blow holes caused by air expanding within the voids and rising to the surface, shall be repaired when the concrete is in the plastic state.

7.2.5.5 Identification of Units

Fabricator's name, year of manufacture, unit serial number and design loading shall be cast into the bottom of the units in 50 mm letters about 1.0 m from the unit end.

7.2.5.6 Concrete Measuring, Mixing and Placing

The procedures outlined in the ACI Standard 304 "Guide for Measuring, Mixing, Transporting and Placing Concrete" shall be followed. The time from initial mixing of the concrete until placing the concrete in the forms shall not exceed one hour. The elapsed time between the successive placing of concrete onto previously placed concrete shall not exceed 45 minutes.

7.2.5.7 Concrete Temperature

The concrete temperature shall be between 10°C and 30°C at the time of placing in the forms.

7.2.5.8 Finished Riding Surface

Where the top surface of the girder is designed to be the riding surface, the use of a continuous screed rail, independent of the top of the grout keys, shall be employed. The top surface shall follow a smooth profile, which incorporates the required camber adjustments.

7.2.5.9 Camber Hubs

Three camber hubs shall be placed in each girder, located along the centerline of the girder at the midpoint and 150 mm from each end. The camber hubs shall consist of 10 mm galvanized bars, of sufficient length to project vertically 10 mm above the riding surface.

The Contractor shall store the members in such a manner as to provide access for measuring camber as determined by the Consultant. The Contractor shall provide personnel as requested to assist the Consultant with the camber readings. The Contractor shall record the girder camber at the midpoint of each girder within 24 hours of girder destressing.

7.2.5.10 Concrete Finish

The exterior concrete girder faces shall have a Class 2 Rubbed Surface Finish, unless specified otherwise. Except the top, all the remaining surfaces shall have a Class 1 Form Surface Finish.

(a) Class 1 Form Surface Finish
This finish is essentially that obtained when concrete has been cast and adequately compacted in a properly oiled steel form. All fins, honeycomb, irregularities, cavities over 10 mm diameter or other similar defects shall be thoroughly chipped out. These areas shall be saturated with water for a period of not less than thirty minutes, carefully pointed and trued with mortar of a colour which will match the existing concrete. Mortar used for pointing shall be less than one hour old. The patches shall be properly cured by placing the repaired unit in the steam cure for a period of four days immediately after patching.

The finished surfaces shall be true and uniform. All surfaces which cannot be repaired to the satisfaction of the Consultant shall be finished as specified for Class 2 at no expense to the Department.

(b) Class 2 Rubbed Surface Finish
Class 2 Finish shall be essentially the same as Class 1 except that all holes, cavities and defects shall be repaired so that the finished surface presents a smooth, true, dense, uniformly coloured, and non-stained appearance. The concrete surfaces shall be thoroughly wire brushed to expose any hole or cavity prior to repairs. All residue of form oil shall be removed from the surface.

(c) Class 3 Bonded Concrete Surface Finish
The surface shall be prepared in accordance with the requirements of Class 2 Rubbed Finish except that it need not be of uniform colour. After the surface preparation has been completed to the satisfaction of the Consultant, the surface shall be pressure washed to remove all dust, dirt, laitance and all other bond breaking materials. After the concrete

surface has dried for a minimum of 24 hours, the Contractor shall then supply and apply an approved pigmented sealer, which meets the requirements for a Type 3 sealer of the Material Testing Specifications for Concrete Sealer - B388.

The pigmented sealer shall be applied in accordance with the Manufacturer's specifications. The colour(s) of the proposed coating scheme, which typically shall be similar to the natural colour of cured concrete, must be acceptable to the Consultant before application of the coating. A minimum of two applications of the pigmented sealer are required. When spray application is used the surface shall be back rolled. The Contractor shall ensure that no colour variation is visible and shall match the colour of any previously painted adjointing surfaces. Acceptance of the pigmented sealer used will not be considered to relieve the Contractor of full responsibility for its acceptable performance and appearance.

(d) Class 4 Floated Surface Finish
After the concrete has been consolidated and the surface carefully screeded to the cross section and profile shown on the drawings, it shall be floated and trowelled as necessary to provide a closed, uniformly textured surface without brooming.

(e) Class 5 Floated Surface Finish, Broomed Texture
After the concrete has been consolidated, the surface shall be carefully screeded to the cross section and profile shown on the drawings. When the concrete has hardened sufficiently, the surface shall be finished with a broom of an accepted type. The broom strokes shall be perpendicular to the edge of the unit, and extended from edge to edge, with adjacent strokes slightly overlapped producing corrugations of 2 to 3 mm in depth. Brooming shall be done when the concrete has set sufficiently to produce clear, crisp brooming marks which do not sag or slump, without tearing the surface or disturbing coarse aggregate particles. After final brooming the surface finish shall be free of porous spots, irregularities, depressions, pockets and rough spots and must not vary more than 5 mm when measured using a 3 m straight edge.

Accepted finishing and edging tools shall be used on all edges and expansion joints after brooming.

7.2.5.11 Curing

All prestressed concrete units shall be cured at an elevated temperature. The curing of prestressed concrete units shall essentially be in accordance with CSA A23.4 unless otherwise specified. The ambient curing temperature shall be increased at a rate not exceeding 20°C per hour until a maximum temperature of not more than 60°C is attained. After curing, the temperature of the units shall be reduced at a rate not exceeding 10°C per hour until the temperature of the concrete has fallen to within 10°C of the temperature of the outside air.

Care must be exercised to protect prestressed and non-prestressed concrete units from thermal shock at all times until these units have been fully cured.

(a) Prestressed Concrete

(i) Curing in the Form

The initial application of heat shall commence only after the last of the freshly placed concrete has attained its initial set, normally two to four hours after casting. Heat shall not be applied directly to the concrete, but by a method that will produce a consistent ambient temperature throughout the entire form and enclosure. The increase in temperature and the holding temperature shall be monitored and permanently recorded on a chart at a minimum of 3 quarter points along the form.

(ii) Steam Curing after Removal from the Form

Upon removal from the forms the units shall be cleaned, patched, finished within a period not exceeding 12 hours. The units shall be placed in a manner that will facilitate any clean up or repair work, and that will allow full inspection of all surfaces. Within 24 hours of removal from the form, the units shall be placed within a suitable enclosure, for curing.

The curing enclosure shall provide a minimum of 150 mm of free air space between the concrete surfaces and the coverings. Flexible coverings shall be secured to prevent any moisture loss.

The difference in ambient air temperature adjacent to the concrete at different locations within the enclosure shall not exceed 10°C at any time.

The curing process shall be continued for a period of four days with one of the following methods:

1) Steam Curing
Steam jets shall not directly impinge on the concrete surfaces. The steam must be in a saturated condition maintaining an atmosphere of 95% to 100% relative humidity and a uniform ambient temperature of 40°C to 60°C.

For days with periods of 4 or more hours within a 24 hour period, where measured temperature or humidity levels do not meet the required limits, these days will not be count as a full day of steam cure. An additional day of steam cure beyond the specified 4 days will be required for each non compliant day.

2) Curing with Continuous Misting and Heat
Sufficient number of atomizing misting nozzles shall be strategically located to produce a fine mist with 95% to 100% relative humidity in the enclosure. The water shall be preheated to a temperature which will produce a misting temperature compatible with the ambient temperature. The enclosure shall be heated with radiant heaters to a temperature of 40°C to 60°C. Dry heat shall never touch the concrete surface at any time. A control system shall be installed to shut off the heat when the humidity level drops below 90% in the enclosure. Should the temperature in the concrete rise above 40°C without the misting, the unit will be rejected.

Two continuously recording thermometers and two continuously recording hygrometers are to be provided for each curing enclosure to monitor the concrete ambient temperature and relative humidity. All time-temperature and time-humidity recordings shall be clearly shown on the graph.

(b) Non-Prestressed Concrete

Curing of all non-prestressed concrete shall be in accordance with one of the following methods:

(i) Elevated Temperature Curing

Upon removal from the forms the units shall be cleaned, patched, finished and elevated temperature cured for four days as per section 7.2.5.11(a) “Prestressed Concrete”.

(ii) Moist Curing

The units may be moist cured in lieu of elevated temperature curing in accordance with the following:

Upon removal from the forms the units shall be cleaned, patched, finished, and ready for inspection within a period not exceeding 12 hours. Patching shall be performed with an approved product and at an ambient temperature of 15°C to 30°C. After completion of patching and finishing, within 24 hours of removal from the form, the units shall be placed under two layers of light colored filter fabric or burlap at an ambient temperature of not less than 15°C. The filter fabric or burlap shall be kept in a continuously wet condition throughout the curing period by means of a soaker hose or other means as reviewed and accepted by the Department. Curing with filter fabric or burlap and water shall be maintained for a minimum period of seven days.

7.2.5.12 Release of Stressing Strand

The stressing strand shall not be released until the specified concrete release strength is attained, and the release shall be in accordance with the accepted sequence.

Evidence of casting defects shall be reported to the Consultant prior to release of the strands.

7.2.5.13 Repairing Damaged Concrete

Serious damage, honeycomb and other casting defects shall be immediately reported to the Department and Consultant. Repair procedures shall be developed by a Professional Engineer and submitted for review and acceptance by the Department and Consultant prior to the commencement of the repair. All repairs shall be completed prior to curing of the unit at an ambient temperature of 15°C to 30°C.

Repairs to defects such as cracks, honeycombs or spalls shall be carried out in accordance with this section. Any unacceptable cracks, honeycombs or spalls will result in rejection of the unit.

In this section the "bearing area" of a girder is defined as the portion of the girder bottom flange up to the underside, but not including the radiused transition between the bottom flange and the web, directly above the bearing. The bearing area extends from the end of the unit to 75 mm beyond the edge of the shoe plate. The "anchorage area" of a girder is defined as the full height portion of the girder that is two times the girder depth from the end of the girder but is not in the bearing area.

(a) Cracks

The following cracks are unacceptable and may result in rejection of the unit unless reviewed and accepted by the Consultant and the Department:

- Cracks in the bearing area of a girder
- Cracks in the anchorage area of a girder exceeding 0.5 mm in width.
- Cracks outside of the girder bearing and anchorage areas exceeding 0.2 mm or longer than 300 mm.

All cracks 0.2 mm or greater in width shall be repaired by epoxy injection in accordance with the manufacturer's instructions. Coring shall be carried out to confirm the penetration of the epoxy into the cracks if requested by the Department.

The Contractor shall immediately notify the Department and the Consultant, if a crack that has a potential to be a shear crack exceeds 0.15 mm in width and longer than 0.25 times the girder depth. Crack length shall be measured along the horizontal axis and a crack will be considered to be a shear crack if inclined at an angle between 30° and 60° from horizontal.

(b) Honeycombs and Spalls

The following conditions of honeycomb or spall are unacceptable and may result in rejection of the unit unless accepted and signed off by the Design Engineer and reviewed by the Department:

- Any honeycombs or spalls in the bearing or anchorage areas of the girder
- Major honeycomb or spall in areas outside the bearing and anchorage areas of a girder. Major honeycombs and spalls are described as honeycombs and spalls that are more than 30 mm deep or more than 0.1 m^2 in area.

When accepted by the Consultant and the Department, repairs for honeycombs and spalls may be made using a cementitious material. Repairs of minor honeycombs and spalls may be made after destressing of the girder. However major honeycombs and spalls shall be repaired before destressing the girder.

7.2.5.14 Type 1c Sealer

The Contractor shall supply and apply an approved Type 1c sealer to the girder surfaces as shown on Standard Drawing S-1637 "Type 1c Sealer for Precast Girders" included with these specifications.

Type 1c sealers shall meet the current Material Testing Specifications for Concrete Sealers - B388.

The sealer shall be applied on clean dry surfaces free of form oil, and in accordance with the manufacturer's recommendations however the application rate shall be increased by 30% from that indicated on the approved list. Before applying the sealer the concrete shall be cured for at least 14 days. Mortar patches shall be cured for at least two days. The concrete surface shall be dry, and air blasted to remove all dust and accepted by the Consultant prior to applying sealer. In order to ensure uniform and sufficient coverage rates the Contractor shall apply measured volumes of sealing compound to appropriately dimensioned areas of concrete surface, using a minimum of 2 coats.

The Contractor shall ensure that the sealer is not applied in the grout pockets, lifting hook pockets or areas of the girders that will have field concrete cast against them.

The Consultant reserves the right to sample and test the sealer supplied by the Contractor.

7.2.5.15 Sandblasting

The concrete surfaces in shear key, block out, diaphragm and girder end void locations shall be sandblast roughened by the Contractor to the acceptance of the Consultant. The blasting shall be sufficient to remove all laitance and uniformly expose the aggregate particles.

7.2.5.16 Dimensional Tolerances of Cast Units

The maximum dimensional deviation in mm, of cast units from that as detailed on the drawings shall not exceed the following:

Length	± 20 mm x length (m)) 50
Width	± 3 mm
Depth	± 5 mm
Camber	± 20 mm x length (m)) 50
Sweep (NU Girders)	1 mm/m
Sweep (Other Units)	deviation from true, 20 mm x length (m)) 50
Projection of Stirrups	
Top of Girder	± 12 mm
Bearing Areas	out of flatness of bearing areas, 3 mm
Bulkheads	warpage or tilt of ends, 5 mm
Rail Anchor Bolts	out of line, 5 mm
	in spacing, 5 mm
	in projection, 5 mm
Dowel Holes	out of plumb, 5 mm
Void Location	surface to void dimension, ± 15 mm after casting

7.2.5.17 Handling and Storage

Precast units shall be handled by means of accepted lifting devices at designated locations. Units shall be maintained in an upright position, supported near the ends and on stable foundations.

7.2.6 Testing and Inspection

7.2.6.1 Access

The Contractor shall provide the Consultant with suitable and safe access to the works for the purposes of testing and inspection. The Contractor shall provide the following:

(a) Heated laboratory space, minimum of 3 m x 3 m, capable of being locked, located in the proximity of the work

(b) A work bench 1 m x 3 m x 1 m high

(c) Cylinder storage chest with temperature control and a max/min thermometer, as per CSA Standard A23.2-3C

(d) A sump and a water supply suitable for cleaning all testing equipment

(e) A calibrated weigh scale.

7.2.6.2 Inspection

The Contractor shall be responsible for quality control. Inspection of the units by the Consultant will not relieve the Contractor of his responsibility for quality control.

The following stages of manufacturing require the Consultant's acceptance:

(a) Form dimensions and set-up
(b) Placement of reinforcing steel
(c) Placement of voids and hardware
(d) Stressing
(e) Concrete mixture and placement
(f) Form stripping
(g) Clean-up and repair
(h) Finishing and application of sealer
(i) Curing
(j) Application of Class 3 finishes
(k) Storage of units

7.2.6.3 Test Methods

Sampling, making, curing and testing concrete specimens shall be in accordance with the requirements of the following CSA standards:

- Sampling - A23.2-1C
- Concrete Test Cylinders - A23.2-3C
- Testing Concrete Cylinders - A23.2-9C
- Air Content - A23.2-4C
- Density of Concrete - A23.2-6C
- Air Void Determination - A23.2-17C

7.2.6.4 Testing by the Contractor

The Contractor shall provide testing equipment, facilities and personnel to ensure that the concrete supply meets all requirements of the specifications. He shall maintain the required air entrainment by testing and making adjustments to the mix prior to and during the placing of concrete in the forms. The Consultant may test the air content to ensure that this is being correctly maintained however testing of concrete by the Consultant will not relieve the Contractor of his overall responsibility for control of the quality of concrete.

7.2.6.5 Release Strength Test Cylinders

The Contractor shall make and test concrete cylinders to prove that the required release strength as stated on the drawing has been attained prior to release of the stressing strand. When one or more units are cast continuously, at least two cylinders shall be taken from the concrete of the last unit poured to represent the release strength for all units. These cylinders shall be cured with the bridge unit. Only testing of the first cylinder will be necessary if the required release strength is obtained. In the event all cylinders are tested without the required strength being obtained, the Consultant shall be contacted and his acceptance obtained for the release of the units.

7.2.6.6 28 Day Strength Testing

The Contractor shall make concrete test cylinders to determine the 28-day strength. The Consultant will determine from which batch the test cylinders shall be taken. Samples for testing will be taken from the fresh concrete being placed in the forms at the rate of one set of cylinders for every three bridge units cast continuously. Additional cylinders may be cast at the discretion of the Consultant. A set shall consist of three cylinders. A strength test will be the average of the 28-day strengths of the three cylinders (one set). Continuous casting shall mean no break in the casting longer than one hour.

The Contractor shall be responsible for transporting the test cylinders to an independent CSA testing laboratory. The transportation and testing of concrete test cylinders will be at the Contractor's expense. These tests shall represent the strength of the cast concrete. Test results shall be forwarded to the Consultant within 24 hours of testing.

The Contractor shall be responsible for all travel, boarding and lodging costs incurred by the Consultant to inspect prestressed and precast concrete bridge units and miscellaneous precast components being fabricated outside the Province of Alberta. Also included shall be the costs for a department representative to attend the prejob meeting and three additional site visits during the course of fabrication.

7.2.6.7 Fabrication of Prestressed/Precast Units in Cold Weather

The Contractor shall accept full responsibility for the protection of prestressed/precast concrete units when fabricating in adverse weather conditions.

When the ambient temperature is, or is expected to be, below 5°C during fabrication the following provisions for cold weather casting shall be put in place:

(a) The Contractor shall construct an enclosure capable of maintaining an ambient temperature within the structure of between 15°C and 30°C. The enclosure shall be sufficiently sized to accommodate steel forms, workers and the casting equipment. The enclosure temperature shall be constantly monitored and shall be maintained within the specific range.

(b) The heating system shall be designed to provide uniform distribution of heat and the combustion by-products shall be kept out of the enclosure.

(c) Before casting concrete, adequate preheat shall be provided to raise the temperature of the formwork, reinforcing steel, stressing strand, miscellaneous iron, etc. to at least 10°C.

(d) The fabricated units shall be kept in the enclosure until they are patched, repaired and transferred to the curing enclosure.

7.2.7 Failure to Meet Strength Requirements

7.2.7.1 Right of Rejection

The Consultant reserves the right to reject any concrete whatsoever which does not meet the specified strength determined in accordance with this Specification. The Consultant may, however, at his discretion, accept concrete which does not meet the specified strength requirements, and in such case payment will be made in accordance with section 7.2.7.2.

7.2.7.2 Percentage Payment Schedule

When the specified 28-day concrete strength is not met, the precast bridge unit shall be paid as per the following percentage of the unit price:

Strength below the specified 28-day strength	Percentage of Unit Price to be paid
1 MPa or less	95%
1 MPa to 2 MPa	90%
2 MPa to 3 MPa	85%
3 MPa to 4 MPa	80%

In the event that the concrete tested is more than 4 MPa below the specified 28-day strength, the bridge units fabricated from the concrete represented by the test specimens shall be rejected. In the event that the unit has been delivered and/or erected in the field, it shall be removed and returned to the Contractor's plant for replacement. The entire cost of replacement, including delivery and erection costs, shall be at the Contractor's expense.

7.2.7.3 Coring

If any concrete tested fails to meet the specified strength, the Contractor may request permission to core. If the coring is accepted by the Consultant, the Contractor shall make arrangements, through the Consultant, to employ an independent, qualified testing service, at the Contractor's expense.

The Consultant will specify the location of the coring to ensure that the cores represent the same concrete as the cylinders. The average of three adjacent cores taken from one bridge unit shall constitute a test. The cores shall be taken and tested in accordance with CSA Standard A23.2-14C within seven days of the date of testing the 28-day cylinders. The core test will represent all bridge units represented by the strength test. Alternatively, the Contractor may choose to take a core test from each of the other units in question, in which case each of these core tests will then represent a bridge unit.

Where the concrete strength as indicated by the cores is higher than the strength based on the 28-day concrete cylinder tests, the core results shall be used as the basis for acceptance and payment of the concrete. If the core strengths are lower than the strength of the 28-day concrete strength cylinder tests, the cylinder tests shall govern.

7.3 Erection of Precast Concrete Girders

7.3.1 General

The Contractor shall erect the girders, remove any temporary construction, and do all work required to complete the erection in accordance with the drawings and these specifications. Drilling, coring or the installation of any fasteners or anchoring systems or any other modifications shall not be made to the concrete elements. The Contractor shall not erect the precast concrete girders until the substructure concrete has been cured a minimum of three days and achieved 80% of the 28 day specified concrete strength requirements.

Without restricting generality, erection includes:

- removing anchor bolt grout can lid
- placing and grouting anchor bolts and bearings
- erecting the girders
- placing and grouting of connector bolts and diaphragms
- post-tensioning
- placing and sealing grout bearing pads
- cutting-off lifting hooks, and grouting lifting holes on exterior girders and all lifting hook pockets

7.3.2 Handling and Storing Materials

Precast concrete units to be stored shall be placed upright and shored on timber blocking and kept clean and properly drained.

7.3.3 Temporary Supporting Structures and Berms

The temporary supporting structures and berms shall be properly designed and substantially constructed and maintained for the forces which may come upon them. Berms shall be constructed in a manner and of such materials that they will not be eroded by stream flow nor introduce silt into the water. The Contractor shall prepare and submit to the Consultant, for review and acceptance, drawings for temporary supporting structures and berms, and for traffic control and accommodation where applicable. Acceptance of the Contractor's drawings shall not be considered as relieving the Contractor of any responsibility. All drawings submitted shall bear the seal of a Professional Engineer registered in Alberta.

Temporary supporting structures and/or berms will not be permitted to remain in any stream channel during spring break-up or run-off periods, unless all necessary approvals have been obtained by the Contractor from pertinent agencies.

Incidental damage to other property, such as fills and stream banks, resulting from the existence of berms, shall be the responsibility of the Contractor.

7.3.4 Review of Erection Procedure

The Contractor shall submit to the Consultant, for record purposes and for examination as to concept only, four copies of a detailed erection procedure three weeks in advance of the scheduled start of erection. The erection procedure shall include all drawings and documents necessary to describe the following:

(a) Access to work, earth berms and work bridges.

(b) Type and capacity of equipment. Cranes shall be used for handling and erecting precast concrete units.

(c) Sequence of operation, including position of cranes, trucks with girders, and traffic accommodation.

(d) Detailed crane position on the ground, particularly adjacent to substructure elements, such as abutment backwalls, with details of load distribution on wheels and outriggers.

Details of crane position on the structure, showing wheel loads and axle spacing of equipment moving on structure.

(e) Loads and their position from crane wheels and outriggers during all positions of lifting when crane is on structure.

(f) Details of temporary works, supporting structures drawings, including proposed methods to be used to ensure the required splice elevations and structure shape prior to placing concrete, and/or post-tensioning and method of providing temporary supports for stability.

(g) Details of lifting of units, showing vertical forces at lifting hooks.

(h) Provisions for control and adjustment of errors for width and positioning of curbs or exterior units.

(i) Complete details of blocking for bearings where necessary to constrain movements due to horizontal forces and/or gravity effects.

(j) Details of post-tensioning procedures, including strand specifications, jack dimensions, pressures, forces and elongations, and grouting.

(k) Grout pad construction. Refer to section 7.3.6 of these Specifications.

(l) Details of release of temporary supporting structures.

(m) Provide an “As Constructed” detailed survey of the substructure showing the following:
- location and elevation of all bearing grout pad recesses,
- shim height at each bearing location,
- top of girder elevations at each bearing (and each splice location where appropriate).

The erection procedure shall bear the Seal of a Professional Engineer registered in Alberta, who shall assume full responsibility to ensure that his design is being followed. Safety and compliance with the Occupational Health and Safety Act and Regulations thereunder, shall be integral parts of his design.

The Contractor shall continue to be fully responsible for the results obtained by the use of these sealed drawings, with the Professional Engineer also assuming responsibility, as the Contractor's Agent, for the results obtained.

Work shall not commence until the Consultant's acceptance of the proposal has been obtained. The Contractor's project manager and field superintendent may be required to attend a prejob meeting at a location determined by the Consultant prior to commencement of any field work.

Before erection begins the Contractor shall do a complete superstructure layout by means of chalk lines and markings applied to all substructure units, showing bearing and girder positions in accordance with the accepted layout plan.

The Consultant's acceptance shall not be considered as relieving the Contractor of the responsibility for the safety of his methods or equipment, nor from carrying out the work in full accordance with the drawings and specifications.

7.3.5 Girder Adjustments

It is essential that the girders be erected with utmost attention being given to girder positioning, alignment, and elevation. The Contractor shall adjust girder position, bearing location and bearing elevation in order to achieve as closely as possible the lines and grades shown on the drawings. The Contractor shall minimize any differential camber (girder to girder), and the sweep of the girders by jacking, loading of girders, winching, or whatever means are necessary, and shall provide the necessary temporary attachments to hold the girders in position.

The maximum dimensional deviation in mm, of erected precast concrete units from that as detailed on the drawings shall not exceed the following:

Sweep (NU Girders)	1 mm/m
Sweep (Other Units)	deviation from true, 20 mm x length (m)) 50

7.3.6 Grout Pockets and Grout Pads

The Contractor shall construct grout pads using Sika 212 flowable grout or approved equivalent. Filling of grout pockets and construction of grout pads shall be done by workers competent in this work.

Grout shall be packaged in waterproof containers with the production date and shelf life of the material shown. It shall be mixed, placed, and cured in strict accordance with the manufacturer's recommendations.

The method of forming and pouring the grout shall be submitted to the Consultant for review and acceptance. Dry-pack methods of constructing grout pads will not be accepted.

Sealer shall be applied to the exposed grout pad surfaces in accordance with section 4.25 "Type 1c Sealer".

7.3.7 Grouting in Cold Weather

When the daily minimum air temperature or the temperature of the girders, bearings or substructure concrete in the immediate area of the grouting falls below 5°C, the following provisions for cold weather grouting shall be effected:

(a) Before grouting, adequate preheat shall be provided to raise the temperature of the adjacent areas of the girders, bearings, and substructure concrete to at least 10°C.

(b) Temperature of the grout during placing shall be between 10°C and 25°C.

(c) The grout pads (or girders where appropriate) shall be enclosed and kept at 10°C to 25°C for at least five days. The system of heating shall be designed to prevent excessive drying-out of the grout.

7.3.8 Bearings and Anchorage

The Contractor shall remove all anchor bolt void forming materials prior to grouting. Any residues on the concrete surface, such as oils, grease or other contaminants that can reduce bonding characteristics, shall be removed by sandblasting.

Anchor bolts shall be set accurately and grouted with a non-shrink cement grout accepted by the Consultant. All methods and materials for setting anchor bolts and building bearing pads shall be subject to the Consultant's acceptance. The location of the anchor bolts, in relation to the slotted holes in the expansion shoes, shall correspond with the temperature at the time of erection. The nuts on the anchor bolts, at the expansion ends of spans, shall be adjusted to permit free movement of the spans.

When steel bearings are employed in conjunction with grout pockets in the substructure, the bearings shall be set accurately on galvanized steel shims, and grouted as detailed on the drawings, after the girder erection has been completed. The shims must be located so that a minimum of 75 mm grout coverage is provided. When grout pockets are not detailed, the bearing plates shall be set on the properly finished bearing areas in exact position and shall have a full and even bearing on the concrete.

When required, field welding adjacent to elastomeric pads shall be performed with care to avoid damage to the Elastomer. The temperature of the steel adjacent to the Elastomer should be kept below 120°C. The distance between the weld and the Elastomer should be at least 40 mm.

7.3.9 Assembly

The parts shall be accurately assembled as shown on the drawings. The material shall be carefully handled so that no parts will be distorted, broken or otherwise damaged. Bearing surfaces, and surfaces to be in permanent contact, shall be cleaned before the members are assembled. Diaphragms shall be erected as indicated on the drawings.

7.3.10 Lifting Hooks and Lifting Holes

After the Consultant has approved the erected positions of the girders, all lifting holes on exterior girders shall be filled with an accepted grout. All lifting hooks shall be cut off 50 mm below surface, and all lifting hook pockets shall be filled with an accepted grout.

7.3.11 Painting of Metal Parts

All non-galvanized metal parts, including bearing surfaces not in contact, shall be painted two field coats of paint. Any such painting will be considered as incidental to the work.

7.3.12 Post-Tensioning System

7.3.12.1 General

This work consists of post-tensioning and grouting of cable ducts for cast-in-place and precast concrete.

7.3.12.2 Standards

Applicable requirements of the current edition of the following standards shall be followed:

- CSA A23.1/23.2 - Concrete Materials and Method of Concrete Construction
- CSA A23.4 - Precast Concrete Materials and Construction
- Section 4 of the Specifications for Bridge Construction
- Guide Specification Acceptance Standards for Post Tensioning Systems - PTI
- Specifications for Grouting of Post Tensioned-Structures - PTI
- AASHTO LRFD Bridge Construction Specifications

7.3.12.3 Qualification

The Contractor or the Sub-contractor shall have extensive experience in this work and shall utilize only fully trained, competent and experienced operators. The Contractor shall ensure the site supervisor responsible for the tensioning and grouting operations is at the site whenever these operations are being carried out.

7.3.12.4 Submittals

The Contractor shall submit the following information for the Consultant's review and acceptance at least four weeks prior to commencement of post-tensioning work:

- Five sets of post tensioning drawings illustrating the stressing system and where appropriate, design details and sequence of stressing.
- Five sets of stressing calculations taking into account all applicable losses.

Information for mill reports and stress strain curves for the stressing strand shall be provided at least 5 days prior to stressing.

7.3.12.5 Materials

(a) Stressing Strand
Stressing strand shall conform to the requirements of sections 7.2.4.9 and 7.2.5.3.

Corrosion inhibitor is required when the stressing and grouting operations are not completed within 20 calendar days of the installation of the stressing steel. The corrosion inhibitor, when required, shall be water-soluble and shall have no deleterious effect on the steel, grout or concrete, or bond strength of the steel to concrete.

(b) Anchorages and Distribution
All stressing steel shall be secured at the ends by means of permanent anchoring devices accepted by the Consultant. These devices shall comply with S6-06 Clause 8.4.4.1.

Steel distribution plates or assemblies may be omitted when the anchoring devices are sufficiently large and used in conjunction with an embedded steel grillage that effectively distributes the compressive stresses to the concrete.

(c) Ducts
The Contractor shall provide mortar tight inlets and outlets in all ducts with a nominal diameter of 20 mm in the following locations:

- The anchorage area
- All high points of the duct, when the vertical distance between the highest and lowest point is more than 0.5 m
- Place an inlet at or near the lowest point
- Place free draining outlet at all low points of duct

The Contractor shall provide inlets and outlets with valves, caps or other devices capable of withstanding the grouting pressure. The ducts and vents shall be securely fastened in place to prevent movement. The Contractor shall provide details of inlets and outlets on the shop drawings.

(d) Concrete
Concrete shall be supplied in accordance with section 7.2.4 however the maximum size of coarse aggregate shall be 10 mm and 28 day minimum compressive strength of 50 MPa unless otherwise specified.

(e) Grout
Grout shall be Class C as described in Table 10.9.3-1 and the properties as described in Table 10.9.3-2 of the AASHTO LRFD Bridge Construction Specification. In addition to the requirements noted in the tables, a test for wet density shall also be performed in accordance with the "Standard Test Method for Density" ASTM C138. Pre-bagged grouts shall be packaged in plastic lined bags or coated containers, stamped with the date of manufacture, lot number and mixing instructions. Copies of the quality control data for each lot number and shipment sent to the job site shall be provided to the Consultant for review. Materials with a total time from manufacture to usage in excess of six months shall be retested and certified by the supplier before use, or shall be removed from the job site and replaced.

The average minimum compressive strength of 3 cubes at 28 days shall be a minimum of 50 MPa as per CSA A23.2-1B. The results for bleed test and fluidity test shall meet the requirements noted in Table 10.9.3-2 of the AASHTO LRFD Bridge Construction Specifications.

The Contractor is responsible to perform all grout testing in the field at his cost and he shall ensure that the testing is witnessed by the Consultant. The testing shall be completed by a qualified and experienced technician. The frequency of grout strength testing shall be as follows:

Strength Test

Precast Concrete Girders:	One strength test per girder line
Cast-In-Place Girders:	One strength test for every four longitudinal ducts

The strength test shall be done by an independent CSA certified testing lab.

Bleed Test
At the beginning of each day's grouting operation, perform a wick induced bleed test in accordance with ASTM C940 and with modifications noted in Table 10.9.3-2 of the AASHTO LRFD Bridge Construction Specifications.

Fluidity Test
At the inlet and outlet, perform fluidity test in accordance with the standard ASTM C939 flow cone test or the modified ASTM C939 test.

Wet Density Test
Perform wet density test in accordance with American Petroleum Institute (API) Mud Balance Test API Practice 13B-1: "Standard Procedures for Field Testing Water-based Drilling Fluids".

7.3.12.6 Equipment

(a) Stressing

- Hydraulic jacks and pumps of sufficient capacity shall be used for tensioning of strands.
- The force induced in the stressing strand shall be measured using calibrated jacking gauges, load cells or a calibrated dynamometer.
- The pressure gauge shall have an accurate reading dial at least 150 mm in diameter.
- The forces to be measured shall be within 25 and 75 percent of the total graduated capacity of the gauge, unless calibration data clearly establishes consistent accuracy over a wider range.
- The measuring devices shall be calibrated at least once every six months. The jack and the gauge shall be calibrated as a unit. A certified calibration chart shall be kept with each gauge.

(b) Grouting

- A high speed shear mixer shall be used that is capable of continuous mechanical mixing and producing grout that is free of lumps and undispersed cement. The water supply to the mixer shall be measured by an accurate gauge.
- The holding tank shall be capable of keeping the mixed grout in continuous motion until it is used. The outlet to the pump shall have a screen with 3 mm maximum clear opening.
- A positive displacement type pump shall be used which is capable of producing an outlet pressure of at least 1.0 MPa. A pressure gauge having a full-scale reading of no greater than 2 MPa shall be placed at some point in the grout line between the pump outlet and the duct inlet. A spare fully functional pump shall also be on site.
- Standby flushing equipment with water supply shall be available at the site prior to commencing grouting.
- The grouting equipment shall be of sufficient capacity to ensure that grouting of the longest duct can be completed within 30 minutes after mixing.
- Grout hoses and their rated pressure capacity shall be compatible with the pump output and the maximum grout pressure. All connections from the grout pump to the duct shall be airtight so that air cannot draw into the duct.

7.3.12.7 Construction

(a) Checking Post Tensioning Ducts

Prior to placing post-tensioning steel, the Contractor shall demonstrate to the satisfaction of the Consultant that all ducts are unobstructed.

(b) Welding

Welding of stressing tendons shall not be permitted. Stressing tendons shall not be used as an electrical “ground”. Where the ends of strands are welded together to form a tendon so that the tendon may be pulled through the ducts, the length of the strands used as an electrical “ground” or 1 m, whichever is greater, shall be cut off from the welded end prior to stressing.

(c) Tensioning

Post-tensioning shall be carried out as per reviewed and accepted drawings and stressing calculations. The stressing and release of tendons shall be done in the sequence specified on the drawings. All strands in each tendon shall be stressed simultaneously with a multi-strand jack. The force in the tendons shall be measured by means of pressure gauge and shall be verified by means of tendon elongation. All tendons shall be tensioned to a preliminary force as necessary to eliminate any slack in the tensioning system before elongation readings are started. This preliminary force shall be between 15% and 25% of the final jacking force.

Stressing tails of post-tensioned tendons shall not be cut off until the record of gauge pressures and tendon elongations are provided by the Contractor to the Consultant for review and acceptance. A record of the following post-tensioning operations shall be kept for each tendon installed:

- Project Name & File Number
- Contractor/Subcontractor
- Tendon location & size
- Date tendon installed
- Tendon pack/heat number
- Modulus of elasticity (E)
- Date stressed
- Jack and gauge identifier
- Required jacking force and gauge pressures
- Elongation (anticipated and actual)
- Anchor set (anticipated and actual)
- Stressing sequence
- Witnesses to stressing operation
- Grout information (Brand Name)
- Time for grouting each tendon
- Date grouted

(d) Concreting

The anchorage recesses shall be concreted after tensioning but before grouting the tendons.

The concrete surface of the anchorage recesses shall be abrasive blasted. The recesses shall be thoroughly wetted and covered with a thin cement scrub coat immediately before placing fresh concrete.

(e) Grouting

All ducts or openings shall be clean and free of all deleterious matter that would impair bonding of the grout to the ducts and stressing steel. All ducts shall be thoroughly flushed out with water and blown out with compressed oil free air. All inlets and outlets shall be checked for their capacity to accept injection of grout by blowing compressed oil free air through the system.

A thoroughly mixed grout, meeting all the requirements described in 7.3.12.5(e) shall be passed through a screen with 3 mm maximum clear openings before entering the pump. All grout vents shall be opened prior to commencement of grouting. The duct shall be completely filled by injecting grout from the lowest end of the tendon on an uphill direction. Grout shall be pumped continuously through the duct until no visible signs of water or air are ejected at the outlet. A fully operational grout pump shall be on site for all pumping procedures. A continuous, one way flow of grout shall be maintained at a rate of 5 to 15 lineal metres of duct per minute. The grouting of a tendon shall be completed within 30 minutes of mixing unless otherwise accepted by the Consultant.

Normal pumping pressure shall be between 0.1 to 0.4 MPa, measured at the inlet. The pumping pressure at the injection vent shall not exceed 1 MPa. If the actual pressure exceeds the maximum allowed, the injection vent shall be closed and the grout shall be injected at the next vent that has been or is ready to be closed as long as one way flow is maintained. Grout shall not be injected a succeeding vent from which grout has not yet flowed. For each tendon, immediately after uncontaminated uniform grout discharge begins, a fluidity test shall be performed. The measured grout efflux time shall not be faster than the efflux time measured at the inlet or the minimum efflux time established. If the grout efflux time is not acceptable, additional grout shall be discharge from the discharge outlet. Grout efflux time shall be tested. This cycle shall be continued until acceptable grout fluidity is achieved. In addition to fluidity test, check the grout density using the Wet Density Method. The density at the final outlet shall not be less than the grout density at the inlet. To ensure the tendon remains filled with grout, the ejection and injection vents shall be closed in sequence, respectively under pressure when the tendon duct is completely filled with grout. Valves and caps are not to be removed until the grout has set.

Grouting will not be permitted when the air temperature is below 5°C or above 25°C, nor when there are other conditions judged by the Consultant to be detrimental to the grouting operations.

Check grouted tendons in accordance with AASHTO LRFD Bridge Construction Specifications to ensure no leakage exist. If leaks are present, the Contractor shall submit a proposed method of repair for review and acceptance by the Consultant and the Department.

The Contractor shall provide 50 mm deep grout tube termination recesses formed around the tubes projecting from top of the deck. After grouting, all tubes shall be cut flush with the bottom of the recesses, and the recesses shall then be grouted flush with the top of the deck.

7.3.12.8 Inspection

The stressing and grouting will require the Consultant’s presence. The Contractor shall ensure that adequate notice be given to the Consultant for these operations and access to the work is provided at all times.

7.3.13 Removal of Temporary supporting structures and Site Clean-up

Upon completion of the erection and before final acceptance, the Contractor shall remove all earth material or temporary supporting structures placed in the stream channel or elsewhere during construction. He shall remove all piling, excavated or surplus materials, rubbish and temporary buildings, replace or renew any damaged fences, and restore in an acceptable manner all property damaged during the execution of his work. Disposal of surplus materials shall be in a manner and location satisfactory to the Consultant.

The Contractor shall leave the bridge site, roadway and adjacent property in a neatly restore, and presentable condition, satisfactory to the Consultant; when required, he shall provide written evidence that affected property owners or regulatory agencies have been satisfied.

7.4 Payment

Payment for the **Supply of Girders** and associated material will be made on the basis of the unit prices bid per girder, and in accordance with section 7.2.7, “Failure to Meet Strength Requirements”. The unit prices bid shall include full compensation for the cost of furnishing all materials, labour, tools, equipment and incidentals necessary for fabrication.

Supply and Delivery of Bearings will be paid for on the basis of a lump sum price bid. Items to be included in **Supply of Bearings** shall be as listed in the Special Provisions.

Payment for **Delivery of Girders** will be made on the basis of the lump sum price bid. It shall include full compensation for the costs to deliver all girders and associated materials, and shall include the costs to obtain the necessary approvals and permits from the Motor Transport Board and/or the appropriate local road authorities to transport the girders. Also included shall be the costs to remove all road dirt and spray.

Payment for **Erection of Girders** will be made on the basis of the lump sum price bid which price shall include full compensation for the cost of furnishing all materials, labour, tools, equipment, transportation and incidentals necessary to acceptably complete the erection and site clean-up. For the purposes of payment, installation of such items as bearing plates, anchor bolts, connector bolts, and other accessories and specified items, will be considered incidental and no separate payment will be made therefore.

When materials are delivered to the worksite, payments for:
Supply of Girders,
Supply of Bearings, and
Delivery of Girders
will be made to a maximum of 90% of the price bid of the materials and delivery. Payment for the remainder of the prices bid for supply and delivery will be made as the materials are acceptably installed.

Payment for **Post-Tensioning and Grouting** will be made on the basis of the lump sum price bid which price shall include full compensation for the cost of furnishing all materials, labour, tools, equipment and incidentals necessary to acceptably complete the post-tensioning and grouting process and clean-up.

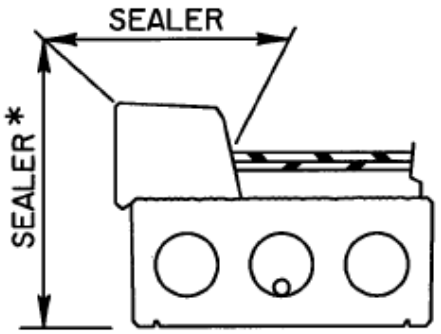

COMPOSITE SLC GIRDERS ③

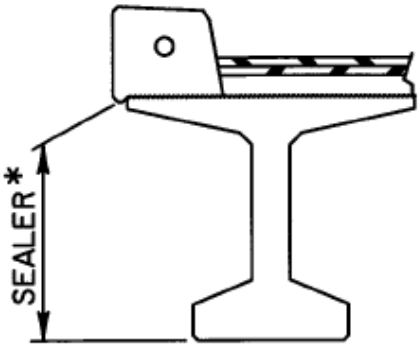

COMPOSITE BULB-TEE GIRDERS ② ③

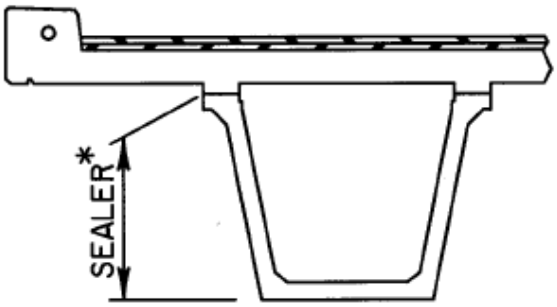

COMPOSITE TUB GIRDERS ③

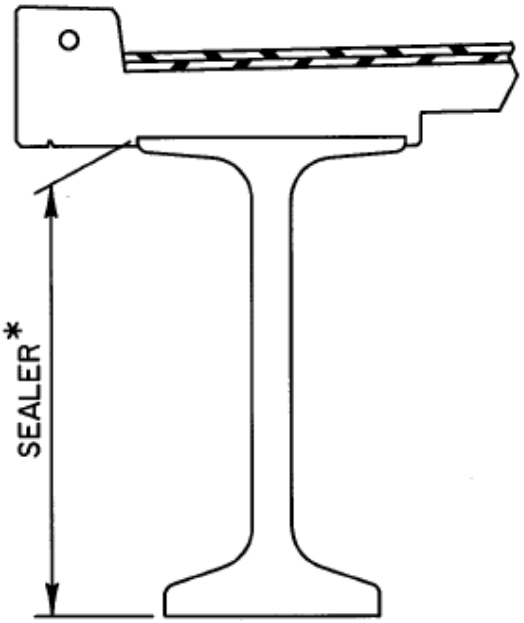

COMPOSITE NU GIRDERS ③

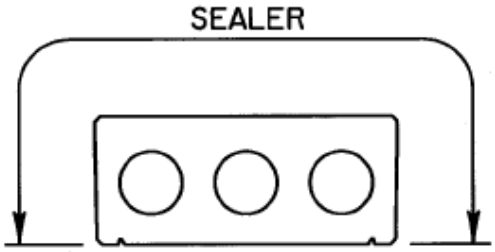

STANDARD SL-510 GIRDERS ③

③

* NOTE:
TYPE Ic SEALER EXCEPT
WHEN PIGMENTED SEALER
IS SPECIFIED

NO	DATE	REVISIONS	BY
④			
③	2010-01-19	SEALER NOTE REVISED	CM
②	2001-05-01	NU GIRDER ADDED & DEPARTMENT NAME	RY
①	99-03-29	BEB CHANGED TO TSB	RY

Alberta TRANSPORTATION
TECHNICAL STANDARDS BRANCH

TYPE Ic SEALER FOR PRECAST GIRDERS

DESIGNED	DRAWN	DATE	APPROVED	SIGNATURE	DATE	DRAWING
RY	WS	97-12-01	EXECUTIVE DIRECTOR			S-1637-97