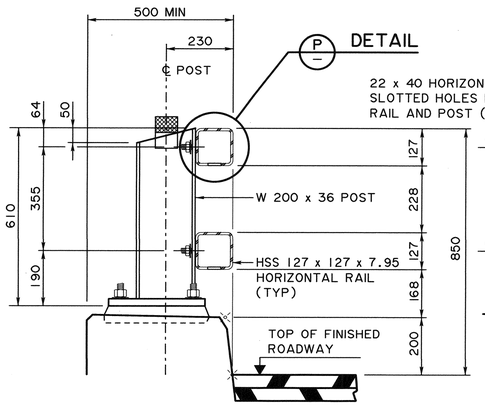

RAIL SECTION

1:10

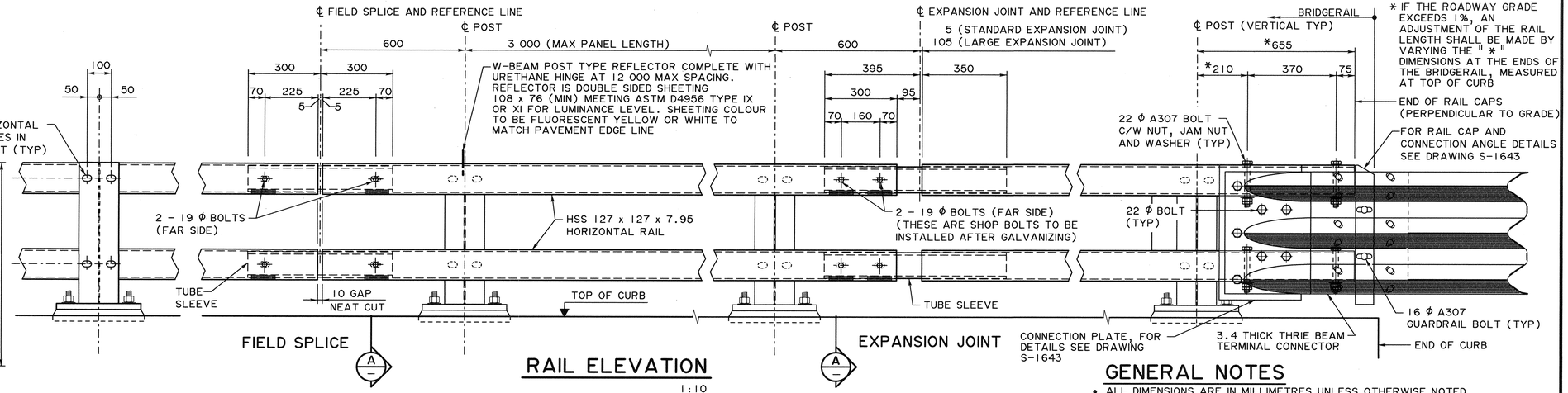

* IF THE ROADWAY GRADE EXCEEDS 1%, AN ADJUSTMENT OF THE RAIL LENGTH SHALL BE MADE BY VARYING THE " * " DIMENSIONS AT THE ENDS OF THE BRIDGERAIL, MEASURED AT TOP OF CURB

END OF RAIL CAPS (PERPENDICULAR TO GRADE)

FOR RAIL CAP AND CONNECTION ANGLE DETAILS SEE DRAWING S-1643

RAIL ELEVATION

1:10

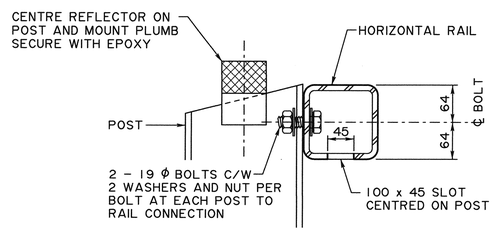

P DETAIL

1:5

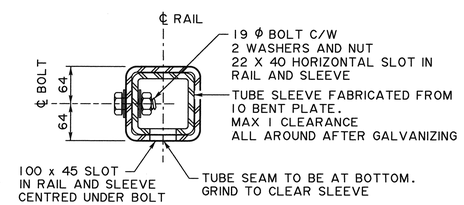

A SECTION - TUBE SLEEVE

1:5

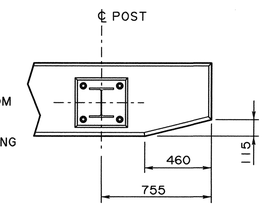

CURB END DETAIL

1:20

GENERAL NOTES

- ALL DIMENSIONS ARE IN MILLIMETRES UNLESS OTHERWISE NOTED
- RAILING CONFIGURATION IS BASED ON A RAILING CONFIGURATION NCHRP 350, TEST LEVEL 4
- RAILING SHALL BE USED WITH CURB CONFIGURATION SHOWN
- DESIGN OF DECK AND CURB REBAR SHALL BE CARRIED OUT ON A SITE SPECIFIC BASIS TO DEVELOP THE CAPACITY OF THE BRIDGERAIL POSTS BASED ON Fy = 350 MPa
- POST SPACING SHOWN IS CORRECT AT 15°C. LOCATION OF BRIDGERAIL POST ANCHOR ROD ASSEMBLIES SHALL BE ADJUSTED TO ACCOUNT FOR INSTALLATION TEMPERATURE. SEE SITE SPECIFIC DRAWINGS FOR ANCHOR ROD ASSEMBLY LOCATIONS
- A STANDARD EXPANSION JOINT SHALL BE PROVIDED EVERY 45 METRES (MAX) OF BRIDGERAIL UNLESS NOTED OTHERWISE ON SITE SPECIFIC DRAWINGS. THE STANDARD EXPANSION JOINT MAY ALSO BE USED WITHOUT MODIFICATION, FOR BRIDGES WHERE THE TOTAL THERMAL MOVEMENT AT A DECK JOINT IS LESS THAN OR EQUAL TO 90 mm
- THE LARGE EXPANSION JOINT MAY BE USED WITHOUT MODIFICATION FOR BRIDGES WHERE THE TOTAL THERMAL MOVEMENT AT A DECK JOINT IS LESS THAN OR EQUAL TO 100 mm
- FOR BRIDGES WHERE THE TOTAL THERMAL MOVEMENT AT A DECK JOINT IS GREATER THAN 100 mm, THE LARGE EXPANSION JOINT SHALL BE USED BUT THE JOINT GAP AT INSTALLATION AND THE TUBE SLEEVE EMBEDMENT LENGTH WILL NEED TO BE MODIFIED TO ENSURE THAT THE GAP IS NEVER SMALLER THAN 10 mm AND THE TUBE SLEEVE EMBEDMENT IS NEVER SMALLER THAN 200 mm

FABRICATION

- BRIDGERAIL INCLUDING APPROACH RAIL TRANSITION SHALL BE IN ACCORDANCE WITH THE STANDARD SPECIFICATIONS FOR BRIDGE CONSTRUCTION SECTION 12 AND SECTION 14
- ALL PLATE STEEL AND STRUCTURAL SHAPES SHALL CONFORM TO CSA G40.21M GRADE 350W OR ASTM A36 EXCEPT STRUCTURAL TUBING WHICH SHALL CONFORM TO ASTM A500B
- ALL BOLTS SHALL CONFORM TO ASTM F3125 GRADE A325 TYPE 1 HEAVY HEX TYPE UNLESS NOTED OTHERWISE. ALL GUARDRAIL BOLTS, NUTS AND WASHERS SHALL CONFORM TO AASHTO M180. ALL BOLTS FOR CONNECTING THE STEEL SPACER TO POST SHALL CONFORM TO ASTM A307
- ANCHOR RODS SHALL CONFORM TO ASTM A193 GRADE B7 (Fy = 725 Mpa, Fu = 860 Mpa). GALVANIZING OF ANCHOR RODS SHALL BE IN ACCORDANCE WITH THE PROCEDURE OUTLINED IN THE STANDARD SPECIFICATIONS FOR BRIDGE CONSTRUCTION
- ALL NUTS AND WASHERS SHALL CONFORM TO ASTM A563 AND F436 RESPECTIVELY UNLESS NOTED OTHERWISE
- ALL W-BEAM AND THRIE BEAM GUARDRAIL (INCLUDING W-THRIE BEAM TRANSITION SECTION) SHALL HAVE A MINIMUM YIELD STRENGTH OF 345 MPa
- ALL WELDING SHALL CONFORM TO CURRENT AWS SPECIFICATION D1.5
- IF ROADWAY GRADE EXCEEDS 2% BOTTOM OF POST SHALL BE BEVELLED TO MATCH ROADWAY GRADE (SEE POST BEVEL DETAIL)
- TUBE SECTIONS SHALL BE FABRICATED IN THE CONFIGURATIONS SHOWN IN "TUBE SECTION TYPES"
- ALL MATERIALS SHALL BE HOT-DIP GALVANIZED AFTER FABRICATION IN ACCORDANCE WITH ASTM A123/A123M AND ASTM F2329 UNLESS NOTED OTHERWISE
- THE BOTTOM SURFACE OF THE BASEPLATES SHALL BE COATED WITH AN APPROVED COATING SYSTEM, SUITABLE FOR APPLICATION ON GALVANIZED STEEL. TO PREVENT CONTACT BETWEEN THE ZINC AND THE GROUT. THE COLOUR SHALL BE MEDIUM GREY
- TIMBER POSTS AND SPACERS SHALL BE COAST DOUGLAS FIR, PACIFIC COAST HEMLOCK OR LODGEPOLE PINE CONFORMING TO THE STRESS GRADE "SELECT STRUCTURAL POSTS AND TIMBERS" (NLGA PARAGRAPH 131 a)

ERECTION

- ALL ALIGNMENT NUTS MUST BE "SNUG- TIGHT" BEFORE ANCHOR RODS ARE FULLY PRETENSIONED
- ALL ANCHOR ROD NUTS AND A325 BOLTS SHALL BE TIGHTENED AN ADDITIONAL ½ TURN OF THE NUT PAST THE "SNUG-TIGHT" CONDITION
- ALL POSTS SHALL BE VERTICAL
- ALL DIMENSIONS ARE MEASURED PARALLEL TO TOP OF CURB AND ALONG THE CENTRELINE OF ANCHOR ROD ASSEMBLIES
- LINE AND ELEVATION OF RAIL SHALL BE SET BY INSTRUMENT
- WORK THESE DRAWINGS TOGETHER: S-1642 AND S-1643

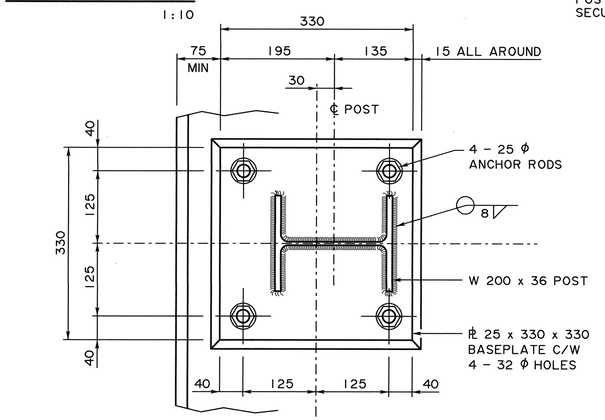

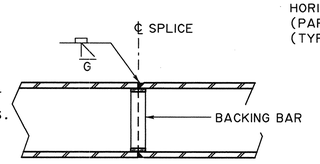

NOTE:
RAIL SHOP SPLICES IF REQUIRED SHALL CONFORM TO THE ABOVE DETAIL AND BE CLEAR OF JOINTS AND CONNECTIONS. NOT MORE THAN ONE SPLICE PER TUBE SECTION

RAIL SHOP SPLICE DETAIL

1:5

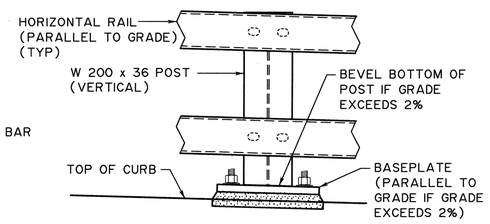

POST BEVEL DETAIL

1:10

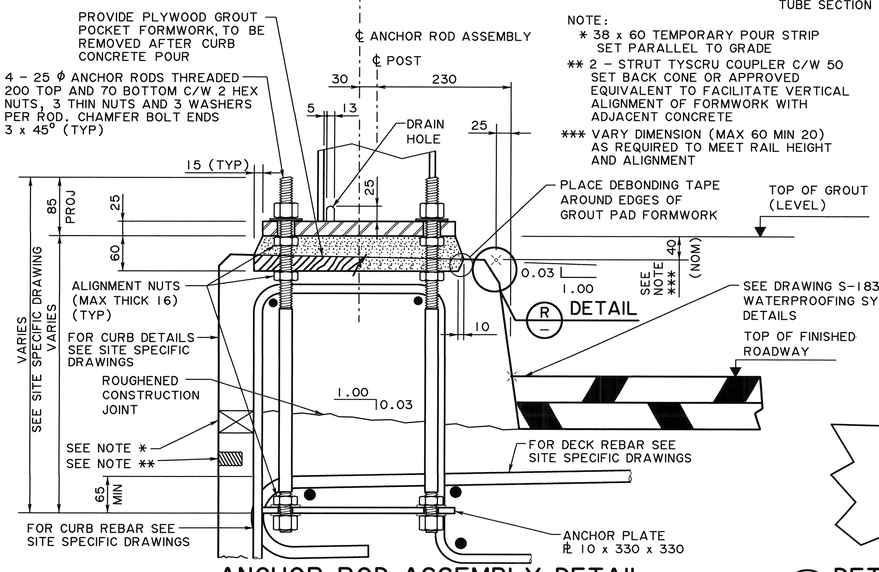

NOTE:
* 38 x 60 TEMPORARY POUR STRIP SET PARALLEL TO GRADE
** 2 - STRUT TYSCRU COUPLER C/W 50 SET BACK CONE OR APPROVED EQUIVALENT TO FACILITATE VERTICAL ALIGNMENT OF FORMWORK WITH ADJACENT CONCRETE
*** VARY DIMENSION (MAX 60 MIN 20) AS REQUIRED TO MEET RAIL HEIGHT AND ALIGNMENT

ANCHOR ROD ASSEMBLY DETAIL

(ANCHOR ROD ASSEMBLY SHALL BE MINIMUM 25 CLEAR FROM BOTTOM OF DECK)

1:5

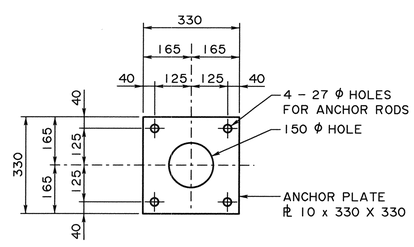

ANCHOR PLATE DETAIL

1:10

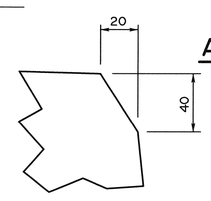

R DETAIL TYP

1:2

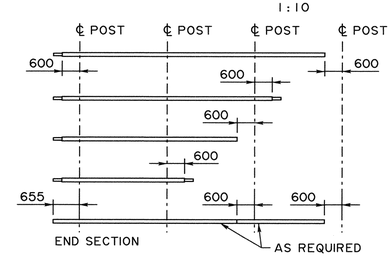

TUBE SECTION TYPES

(DIMENSIONS ARE TO REFERENCE LINES) NTS

REV	DATE	REVISION	BY
5			
4			
3			
2			
1			

DESIGNER CM CM | CHECKER MT

RECOMMENDED DIRECTOR BRIDGE ENGINEERING

APPROVED EXECUTIVE DIRECTOR TECHNICAL STANDARDS BRANCH
D Williamson
DATE 2021.3.2

Alberta Transportation

TL-4 DOUBLE TUBE TYPE BRIDGERAIL BRIDGERAIL DETAILS

DATE	SHEET	DRAWING
2020-09-04	1 OF 2	S-1642-20