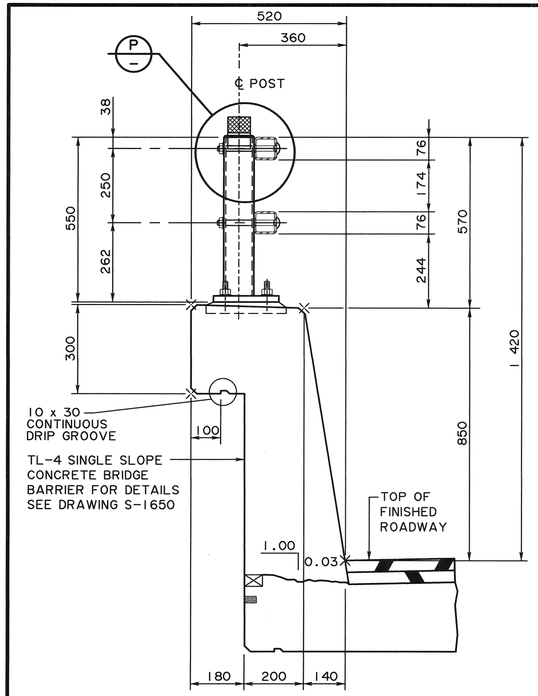

COMBINATION BARRIER SECTION

1:10

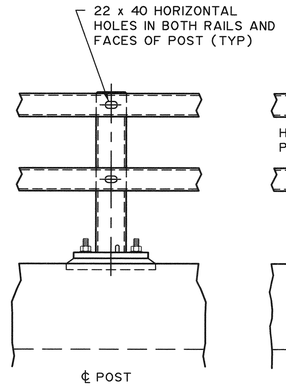

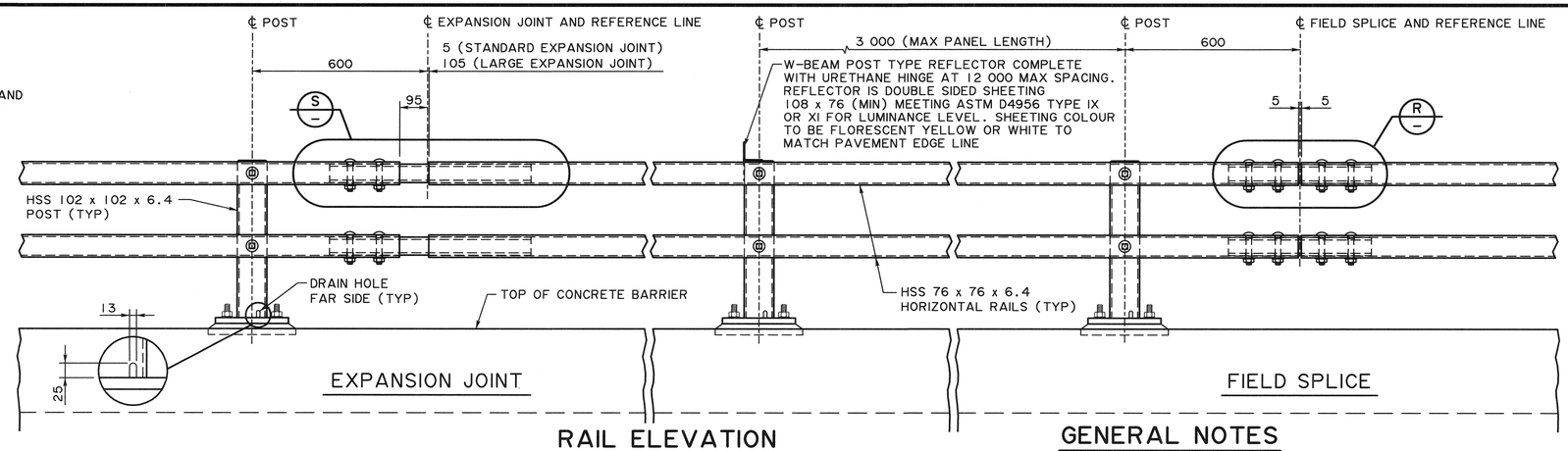

RAIL ELEVATION

1:10

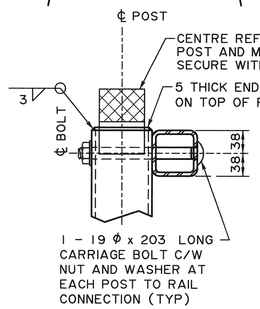

P DETAIL

1:5

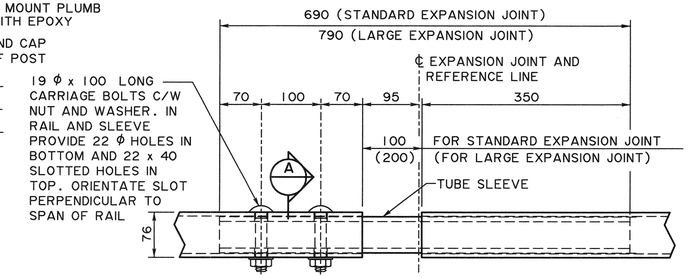

S DETAIL - EXPANSION JOINT

1:5

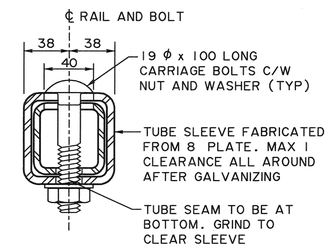

A SECTION - TUBE SLEEVE

NTS

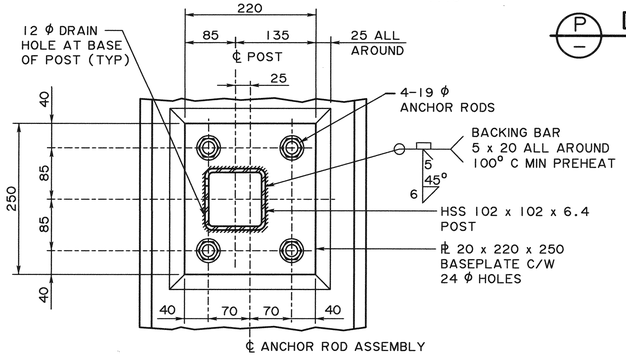

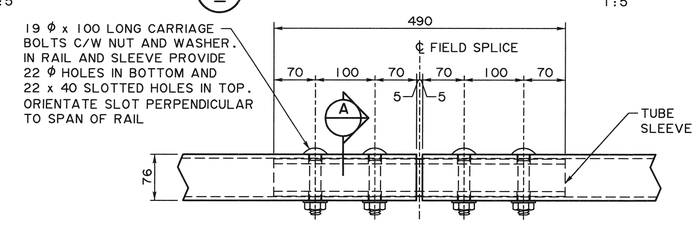

R DETAIL - FIELD SPLICE

1:5

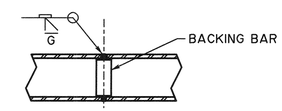

NOTE:
RAIL SPLICES IF REQUIRED SHALL CONFORM TO THE ABOVE DETAIL AND BE CLEAR OF JOINTS AND CONNECTIONS. NOT MORE THAN ONE SPLICE PER TUBE SECTION

RAIL SHOP SPLICE DETAIL

1:5

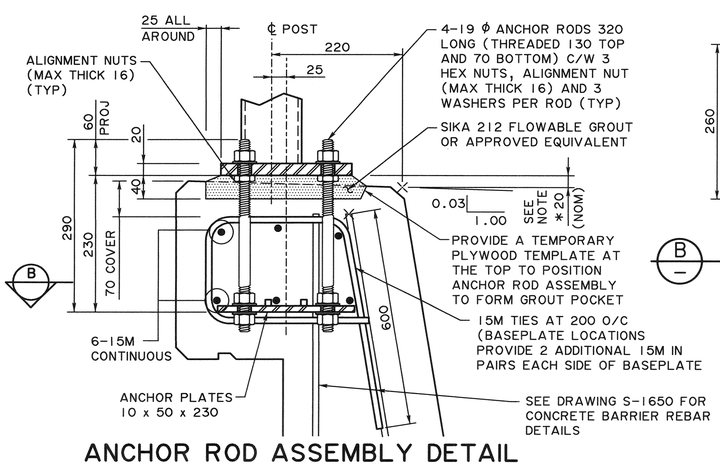

ANCHOR ROD ASSEMBLY DETAIL

1:5

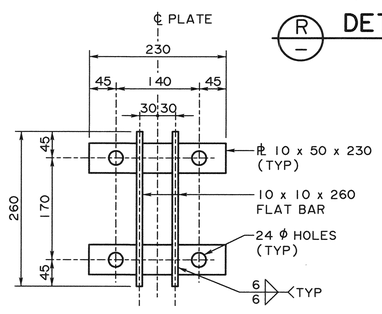

B SECTION - ANCHOR PLATE

1:5

NOTE:
* VARY DIMENSION (MAX 30 MIN 15) AS REQUIRED TO MEET RAIL HEIGHT AND ALIGNMENT

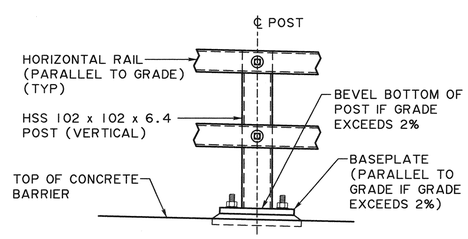

POST BEVEL DETAIL

1:10

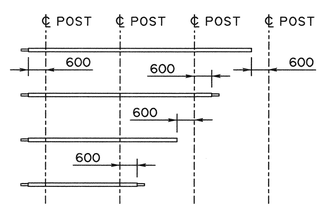

TUBE SECTION TYPES

(DIMENSIONS ARE TO REFERENCE LINES) NTS

GENERAL NOTES

- ALL DIMENSIONS ARE IN MILLIMETRES UNLESS NOTED OTHERWISE
- RAILING CONFIGURATION IS BASED ON A RAILING CONFIGURATION THAT HAS BEEN CRASH TESTED AND MEETS THE REQUIREMENTS OF NCHRP 350, TEST LEVEL 4. CHANGES MADE TO THE BARRIER ARE IN ACCORDANCE WITH CLAUSE 12.4.3.4.5 OF CSA-S6-14
- EXCEPT AS MODIFIED ON THESE DRAWINGS, THE CONCRETE PORTION OF THIS COMBINATION BARRIER SHALL BE IN ACCORDANCE WITH THE DEPARTMENTS TL-4 SINGLE SLOPE CONCRETE BRIDGE BARRIER (DRAWING S-1650)
- POST SPACING SHOWN IS CORRECT AT 15°C. LOCATION OF BRIDGERAIL POST ANCHOR ROD ASSEMBLIES SHALL BE ADJUSTED TO ACCOUNT FOR INSTALLATION TEMPERATURE. SEE SITE SPECIFIC DRAWINGS FOR ANCHOR ROD ASSEMBLY LOCATIONS
- A STANDARD EXPANSION JOINT SHALL BE PROVIDED EVERY 45 METRES (MAX) OF BRIDGERAIL UNLESS NOTED OTHERWISE ON SITE SPECIFIC DRAWINGS. THE STANDARD EXPANSION JOINT MAY ALSO BE USED WITHOUT MODIFICATION, FOR BRIDGES WHERE THE TOTAL THERMAL MOVEMENT AT A DECK JOINT IS LESS THAN OR EQUAL TO 90 mm
- THE LARGE EXPANSION JOINT MAY BE USED WITHOUT MODIFICATION FOR BRIDGES WHERE THE TOTAL THERMAL MOVEMENT AT A DECK JOINT IS LESS THAN OR EQUAL TO 100 mm
- FOR BRIDGES WHERE THE TOTAL THERMAL MOVEMENT AT A DECK JOINT IS GREATER THAN 100 mm, THE LARGE EXPANSION JOINT SHALL BE USED BUT THE JOINT GAP AT INSTALLATION AND THE TUBE SLEEVE EMBEDMENT LENGTH WILL NEED TO BE MODIFIED TO ENSURE THAT THE GAP IS NEVER SMALLER THAN 10 mm AND THE TUBE SLEEVE EMBEDMENT IS NEVER SMALLER THAN 200 mm

FABRICATION

- BRIDGERAIL INCLUDING APPROACH RAIL TRANSITION SHALL BE IN ACCORDANCE WITH THE STANDARD SPECIFICATIONS FOR BRIDGE CONSTRUCTION SECTION 12 AND SECTION 14
- ALL STRUCTURAL STEEL PLATE, BARS AND ROLLED SECTIONS SHALL CONFORM TO CSA-G40.21M GRADE 300W UNLESS NOTED OTHERWISE
- STRUCTURAL TUBING SHALL CONFORM TO CSA G40.21M GRADE 350W CLASS C OR ASTM A500C
- ALL CARRIAGE BOLTS SHALL CONFORM TO SAE J429 GRADE 5
- ANCHOR RODS SHALL CONFORM TO ASTM A193 GRADE B7(Fy = 725 MPa, Fu = 860 MPa). GALVANIZING OF ANCHOR RODS SHALL BE IN ACCORDANCE WITH THE PROCEDURE OUTLINED IN THE STANDARD SPECIFICATIONS FOR BRIDGE CONSTRUCTION
- ALL NUTS AND WASHERS SHALL CONFORM TO ASTM A563 AND F436 RESPECTIVELY
- ALL WELDING SHALL CONFORM TO CURRENT AWS SPECIFICATION D1.5
- IF ROADWAY GRADE EXCEEDS 2% BOTTOM OF POST SHALL BE BEVELLED TO MATCH ROADWAY GRADE (SEE POST BEVEL DETAIL)
- ALL MATERIALS SHALL BE HOT-DIP GALVANIZED AFTER FABRICATION IN ACCORDANCE WITH ASTM A123/A123M AND ASTM F2329 UNLESS NOTED OTHERWISE
- THE BOTTOM SURFACE OF THE BASEPLATES SHALL BE COATED WITH AN APPROVED COATING SYSTEM, SUITABLE FOR APPLICATION ON GALVANIZED STEEL, TO PREVENT CONTACT BETWEEN THE ZINC AND THE GROUT. THE COLOUR SHALL BE MEDIUM GREY
- TUBE SECTIONS SHALL BE FABRICATED IN THE CONFIGURATIONS SHOWN IN "TUBE SECTION TYPES"

ERECTION

- ALL NUTS FOR ANCHOR RODS AND CARRIAGE BOLTS SHALL BE TIGHTENED AN ADDITIONAL ⅓ TURN OF THE NUT PAST THE "SNUG-TIGHT" CONDITION
- ALL POSTS SHALL BE VERTICAL
- ALL DIMENSIONS ARE MEASURED PARALLEL TO TOP OF CONCRETE BARRIER AND ALONG THE CENTRELINE OF ANCHOR ROD ASSEMBLIES
- LINE AND ELEVATION OF RAIL SHALL BE SET BY INSTRUMENT
- ALL ALIGNMENT NUTS MUST BE "SNUG- TIGHT" BEFORE ANCHOR RODS ARE FULLY PRETENSIONED

• WORK THESE DRAWINGS TOGETHER: S-1700 AND S-1701

REV	DATE	REVISION	BY
5			
4			
3			
2			
1			

DESIGNER CM CM | CHECKER MT

RECOMMENDED
DIRECTOR BRIDGE ENGINEERING

APPROVED
EXECUTIVE DIRECTOR
TECHNICAL STANDARDS BRANCH
D Williamson
DATE 2021.3.2

Alberta Transportation

TL-4 COMBINATION BARRIER BRIDGERAIL DETAILS

DATE	SHEET	DRAWING
2020-09-04	1 OF 2	S-1700-20