GENERAL NOTES (CONTINUED)

- ALL CONCRETE SHALL HAVE A MINIMUM 28 DAY COMPRESSIVE STRENGTH OF 45 MPa
- ALL CONCRETE CORNERS SHALL HAVE A 20 CHAMFER OR FILLET UNLESS NOTED OTHERWISE
- CLEAR CONCRETE COVER IS 60 UNLESS NOTED OTHERWISE. THE CONCRETE COVER TO REINFORCING STEEL SHALL BE WITHIN CONCRETE PLACEMENT TOLERANCES AS SPECIFIED IN THE STANDARD SPECIFICATIONS FOR BRIDGE CONSTRUCTION
- ALL REINFORCING STEEL SHALL BE IN ACCORDANCE WITH THE STANDARD SPECIFICATIONS FOR BRIDGE CONSTRUCTION SECTION 5 . SEE SITE SPECIFIC DRAWINGS FOR REINFORCING STEEL TYPE

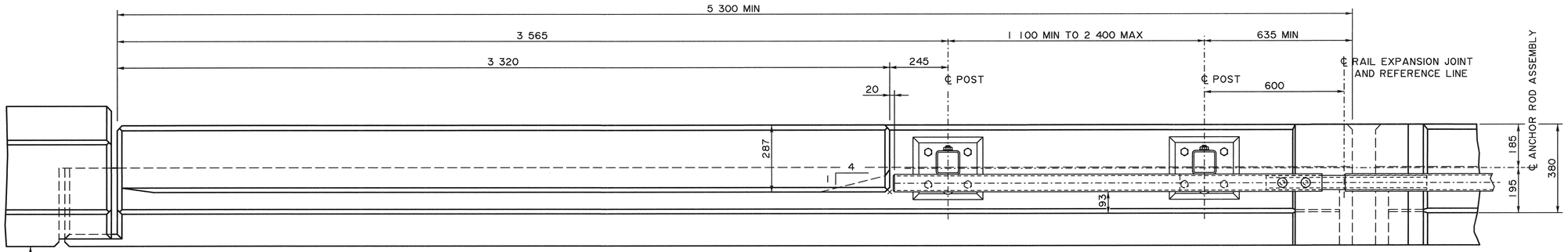

RAIL END PLAN

1:10

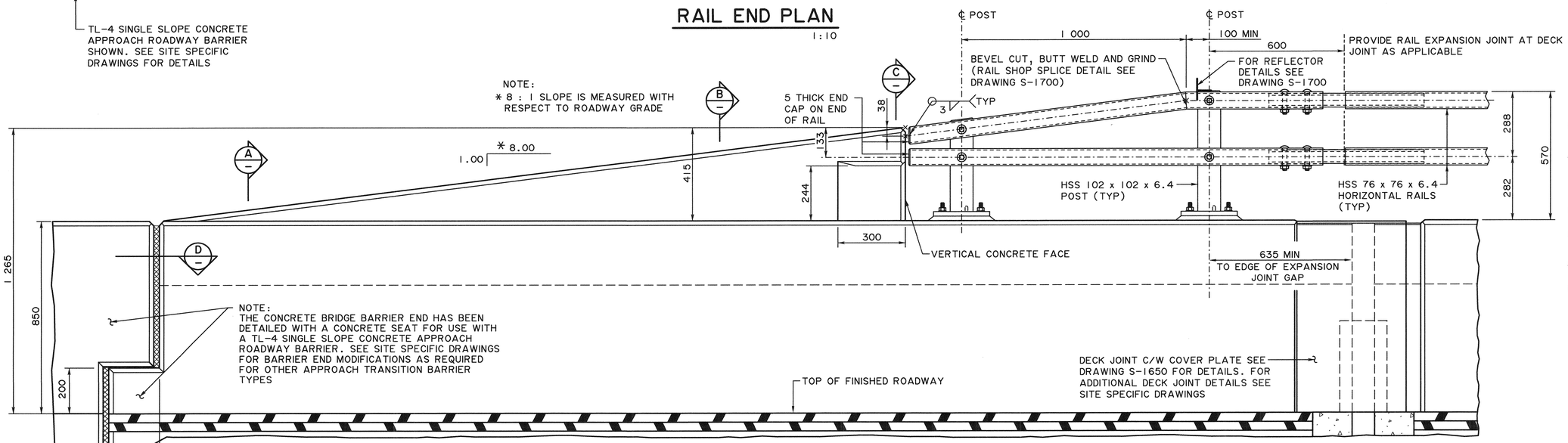

RAIL END ELEVATION

1:10

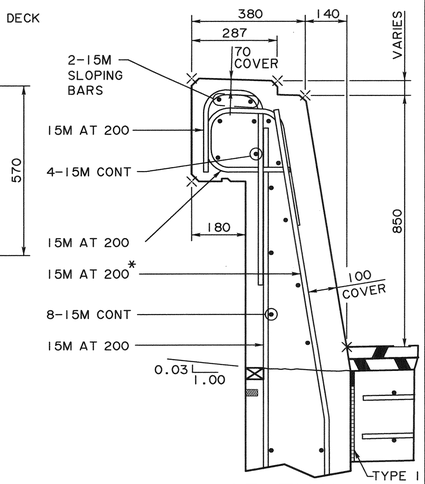

A SECTION

1:10

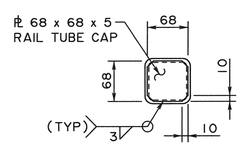

RAIL END CAP DETAIL

1:5

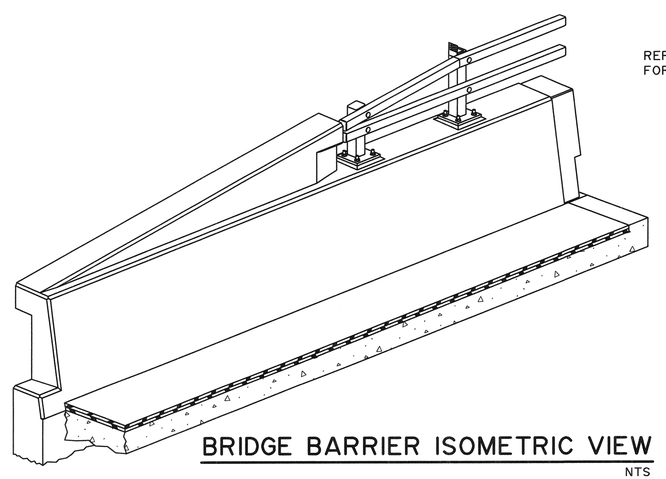

BRIDGE BARRIER ISOMETRIC VIEW

NTS

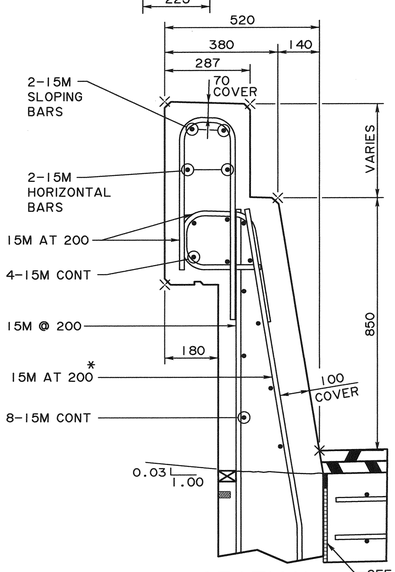

B SECTION

1:10

SEE DRAWING S-1840 FOR TYPE 1 JOINT DETAILS

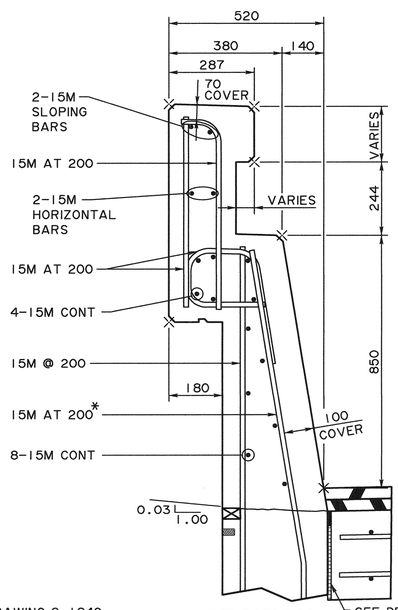

C SECTION

1:10

SEE DRAWING S-1840 FOR TYPE 1 JOINT DETAILS

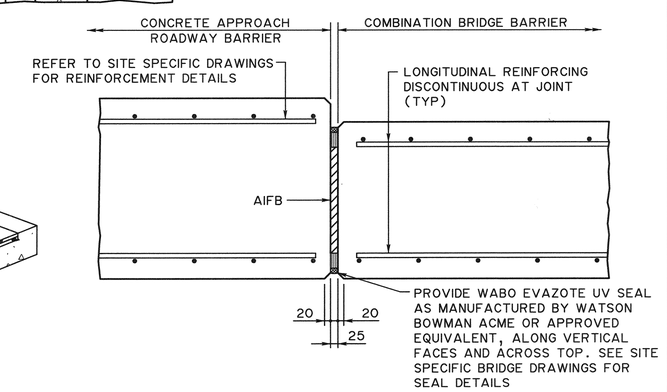

D SECTION

1:10

- WORK THESE DRAWINGS TOGETHER: S-1700 AND S-1701

*NOTE:
2 - 15M BUNDLED AT 200 WITHIN 1 000 OF CONTROL JOINTS, EXPANSION JOINTS, OR BRIDGE BARRIER END

REV	DATE	REVISION	BY
5			
4			
3			
2			
1			

DESIGNER CM CM | CHECKER MT MT

RECOMMENDED DIRECTOR BRIDGE ENGINEERING

APPROVED EXECUTIVE DIRECTOR TECHNICAL STANDARDS BRANCH

D. Williamson

DATE 2021.3.2

Alberta Transportation

TL-4 COMBINATION BARRIER BARRIER END DETAILS

DATE	SHEET	DRAWING
2020-09-04	2 OF 2	S-1701-20