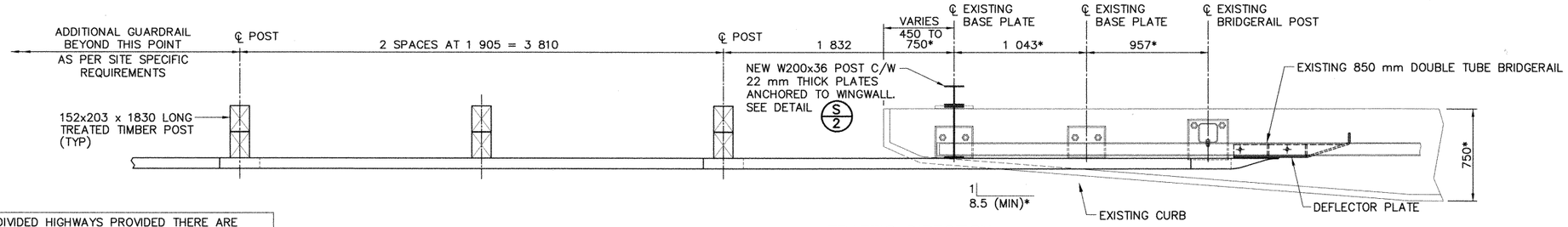

EXIT RAIL NOT REQUIRED ON DIVIDED HIGHWAYS PROVIDED THERE ARE NO HAZARDS DOWNSTREAM OF THE BRIDGE THAT WOULD WARRANT A BARRIER. TYPES OF HAZARDS THAT MAY WARRANT A BARRIER INCLUDE STEEP SIDE SLOPES AND FIXED OBJECTS WITHIN THE CLEAR ZONE.

EXIT RAIL TRANSITION PLAN

FOR BRIDGES ON DIVIDED HIGHWAYS ONLY (TYPICAL TWO EXIT CORNERS OF BRIDGE) 1:20

TRAFFIC DIRECTION

* TYPICAL DIMENSIONS FOR EXISTING 850 mm DOUBLE TUBE BRIDGERAIL. DIMENSIONS TO BE CONFIRMED ON A SITE SPECIFIC BASIS.

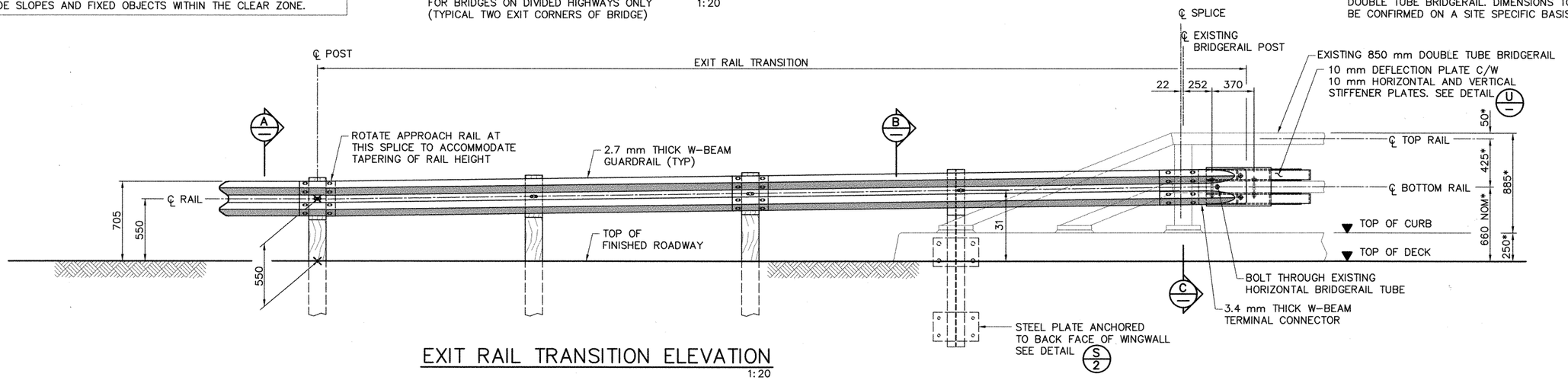

EXIT RAIL TRANSITION ELEVATION

1:20

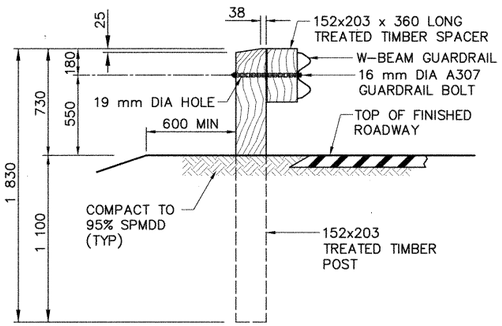

A/– SECTION 1:20

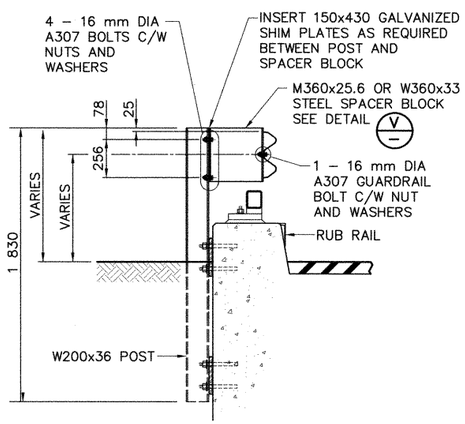

B/– SECTION 1:20

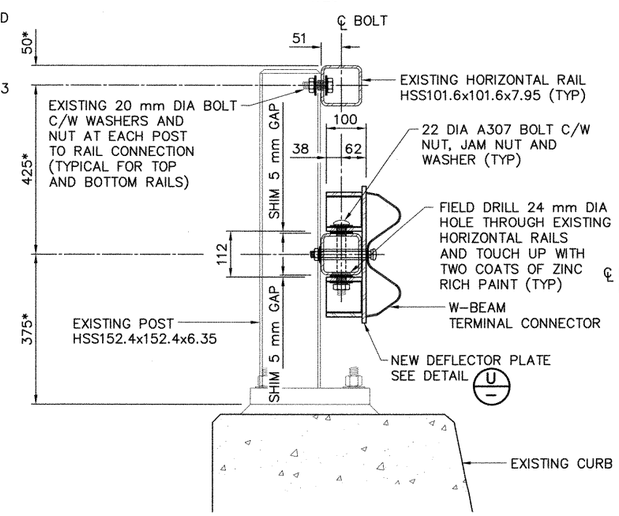

C/– SECTION 1:7.5

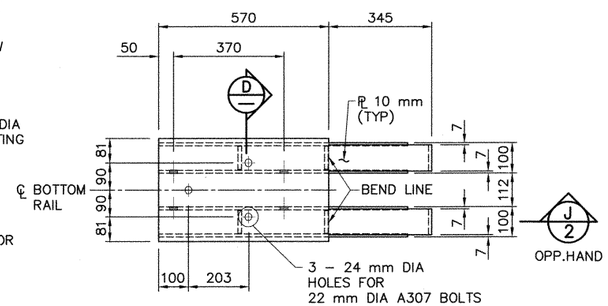

U/– DEFLECTOR PLATE DETAIL 1:10

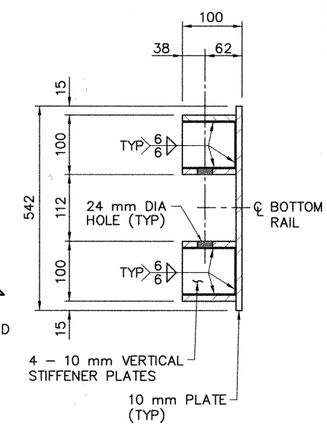

D/– SECTION 1:5

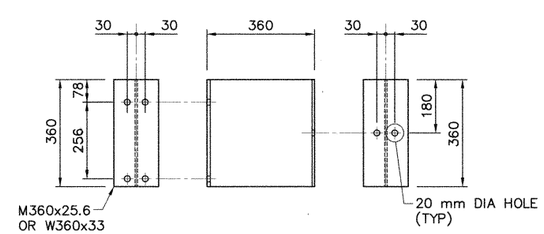

V/– DETAIL 1:10

● WORK THESE DRAWINGS TOGETHER: S-1716-07, S-1717-07, S-1718-07 AND S-1719-07

UMA | AECOM

PERMIT TO PRACTICE
UMA ENGINEERING LTD.
Signature Bob Ramsay
Date Aug 14, 2007
PERMIT NUMBER: P329
The Association of Professional Engineers, Geologists and Geophysicists of Alberta

DESIGNER: PROFESSIONAL ENGINEER A. WAYNE STEWART ALBERTA — DATE 14-AUG-2007

CHECKER: PROFESSIONAL ENGINEER ROBERT JOHN RAMSAY ALBERTA — DATE Aug 14, 2007

REV	DATE	REVISIONS	BY
6			
5			
4			
3			
2			
1			

RECOMMENDED DIRECTOR BRIDGE ENGINEERING: Tom Loo

APPROVED EXECUTIVE DIRECTOR TECHNICAL STANDARDS BRANCH: Mahesh Sadi — DATE AUG. 22/07

Alberta INFRASTRUCTURE AND TRANSPORTATION

APPROACH RAIL TRANSITION UPGRADE 850 mm DOUBLE TUBE BRIDGERAIL SHEET 4

AI BAR CODE	DATE	SHEET	DRAWING
	2007-04-02	4 OF 4	S-1719-07