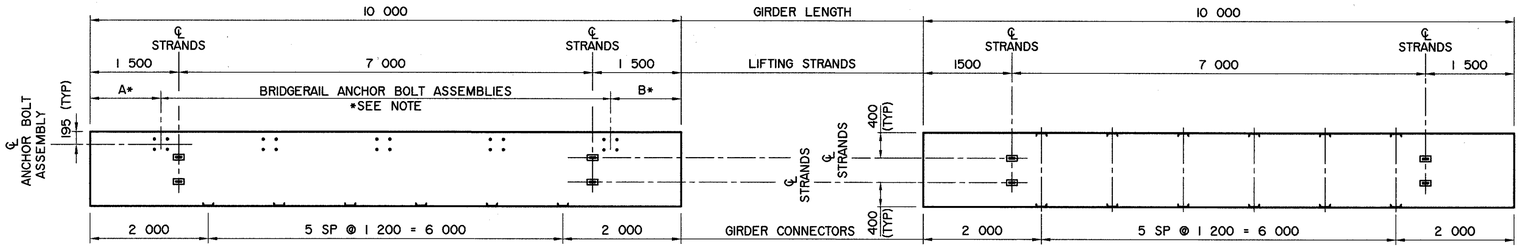

EXTERIOR GIRDER - SQUARE END

1:50

INTERIOR GIRDER - SQUARE END

1:50

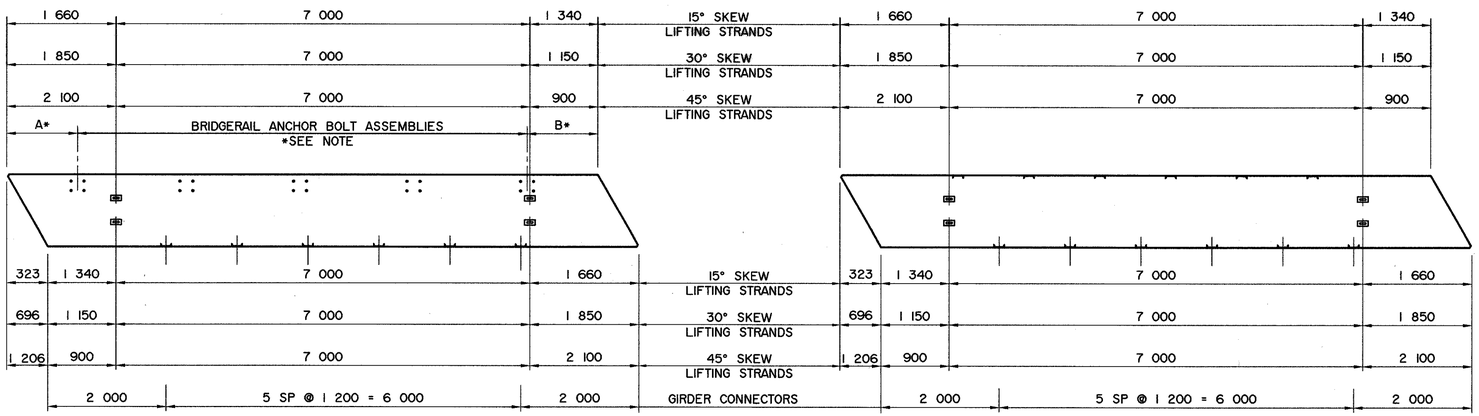

EXTERIOR GIRDER - SKEW END

1:50

INTERIOR GIRDER - SKEW END

1:50

* NOTE: FOR NUMBER AND SPACING OF BRIDGERAIL ANCHOR BOLT ASSEMBLIES, SEE BRIDGERAIL LAYOUT ON SITE SPECIFIC DRAWINGS.

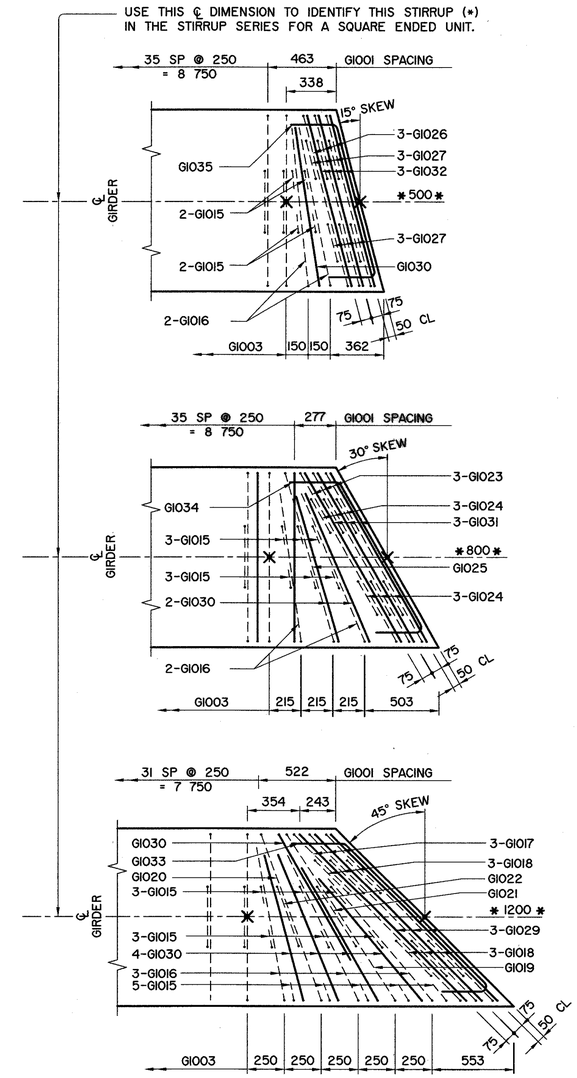

SKEW GIRDER END REINFORCING BARS

1:20

BAR LIST: — INTERIOR SKEWED GIRDER — EXTRA BARS FOR 2 ENDS

MARK	SIZE	TYPE	X	Y	LENGTH	15° SKEW		30° SKEW		45° SKEW	
						NO	MASS	NO	MASS	NO	MASS
G1015	10	C	120		670	8	4	12	6	22	12
G1016	10	C	1 000		1 550	4	5	4	5	6	7
G1017	10	B	1 590		2 690					6	13
G1018	10	B	395		1 495					12	14
G1019	10	B	1 360		2 460					2	4
G1020	10	B	1 190		2 290					2	4
G1021	10	B	500		1 600					2	3
G1022	10	B	435		1 535					2	2
G1023	10	B	1 300		2 400			6	11		
G1024	10	B	325		1 425			12	13		
G1025	10	B	1 160		2 260			2	4		
G1026	10	B	1 165		2 265	6	11				
G1027	10	B	290		1 390	12	13				
G1029	10	A	1 590		2 190					6	10
G1030	10	D			1 300	2	2	4	4	10	10
G1031	10	A	1 300		1 900			6	9		
G1032	10	A	1 165		1 765	6	8				
G1033	10	E			2 015					2	3
G1034	10	E			1 755			2	3		
G1035	10	E			1 635	2	3				
					TOTAL kg:		46		55		82

BAR TYPES

(ALL BAR DIMENSIONS ARE OUT TO OUT) NTS

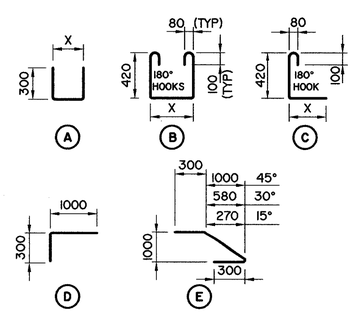

NOTES:

- SHIFT SLAB BARS TO CLEAR LIFTING HOOK POCKETS WHERE REQUIRED.
- SLAB BARS NOT DIMENSIONED ARE TIGHT AGAINST ADJACENT STIRRUP.
- SKEWS ARE SHOWN RIGHT HAND FORWARD.
- LEFT HAND SKEWS ARE OPPOSITE AS SHOWN.

- WORK THESE DRAWINGS TOGETHER : S-1727-07, S-1728-07 AND S-1749-07

BPTEC - DNW Engineering Ltd.
Suite 200, 4220-98 St. Edmonton, AB T6E 6A1
Ph: (780) 436-5376 Fax: (780) 435-4843
www.bptec-dnw.com
556-46

PERMIT TO PRACTICE
BPTEC-DNW ENGINEERING LTD.
Signature
Date August 1, 2007
PERMIT NUMBER: P0132
The Association of Professional Engineers Geologists and Geophysicists of Alberta

DESIGNER — DATE

CHECKER — DATE

REV	DATE	REVISIONS	BY
6			
5			
4			
3			
2			
1			

RECOMMENDED
DIRECTOR BRIDGE ENGINEERING

APPROVED
EXECUTIVE DIRECTOR
TECHNICAL STANDARDS BRANCH
DATE Sept 17, 2007

Alberta INFRASTRUCTURE AND TRANSPORTATION

PRESTRESSED CONCRETE
10 m TYPE SL-510
INTERIOR AND EXTERIOR GIRDER LAYOUTS

AI BAR CODE	DATE	SHEET	DRAWING
	2007-06-07	2 of 3	S-1728-07