NOTE: FOR SKEWED END REINFORCING BAR DETAILS SEE DWG S-1732-07

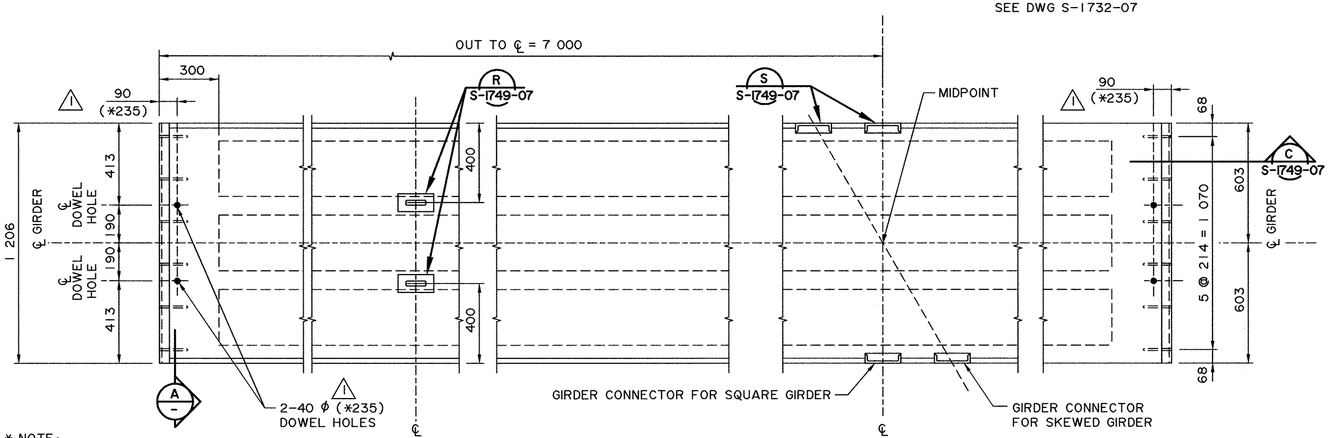


* NOTE:
FOR BACKWALL TYPE ABUTMENTS, DOWEL HOLES SHALL BE 45 DIA WITH THE CENTERLINE OF HOLE LOCATED 235 FROM THE END OF GIRDER REFER TO STANDARD DRAWING S-1756 FOR ADDITIONAL DETAILS.

## PLAN VIEW
1:15

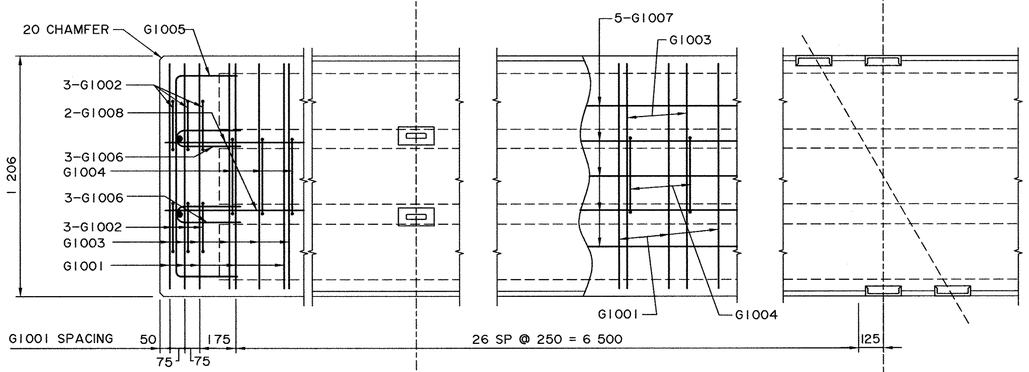


NOTE:
BEND REINFORCING BAR WHERE NECESSARY TO ACCOMMODATE CHANNEL CONNECTORS. STIRRUP SPACING TO BE MAINTAINED.

## REINFORCEMENT PLAN
1:15

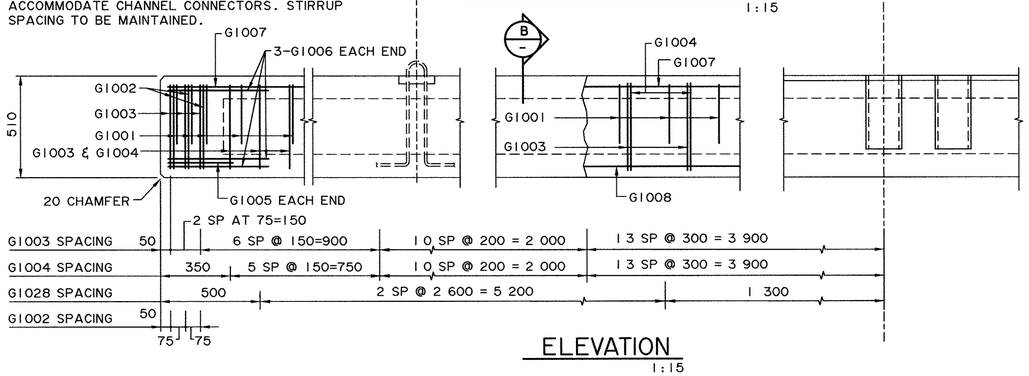


## ELEVATION
1:15

| BAR LIST: FOR SQUARE GIRDER | | | | | | | |
|---|---|---|---|---|---|---|---|
| MARK | SIZE | No. | TYPE | X | Y | LENGTH | MASS |
| G1001 | 10 | 60 | A | 1 125 | 300 | 1 725 | 81 |
| G1002 | 10 | 12 | B | 280 | | 1 380 | 13 |
| G1003 | 10 | 63 | B | 1 125 | | 2 225 | 110 |
| G1004 | 10 | 57 | B | 410 | | 1 510 | 68 |
| G1005 | 10 | 2 | A | 1 000 | 300 | 1 600 | 3 |
| G1006 | 10 | 12 | D | | | 1 075 | 10 |
| G1007 | 10 | 5 | STR | | | 13 900 | 55 |
| G1008 | 10 | 2 | STR | | | 13 800 | 22 |
| G1028 | 10 | 6 | STR | | | 1 100 | 5 |
| | | | | | | | |
| | | | | | | | |
| G2501 | 25 | 4 | A | 13 850 | 350 | 14 550 | 228 |
| | | | | | | TOTAL PLAIN kg: | 595 |

## BAR TYPES
(ALL BAR DIMENSIONS ARE OUT TO OUT)

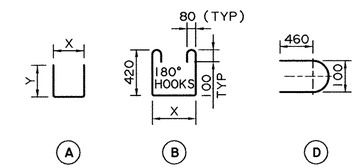


## GENERAL NOTES

- FOR ADDITIONAL NOTES, REFER TO DWG S-1749-07.
- 28-15 ϕ 7 WIRE STRANDS REQUIRED PER GIRDER.
- STRANDS MARKED ⊙ ARE TO BE DEBONDED FOR 1800 mm FROM THE GIRDER ENDS.
- FORCE IN PRESTRESSING STEEL:
  INITIAL TENSION BEFORE RELEASE = 195 kN/STRAND
  DESIGN LOAD AFTER LOSSES = 130.6 kN/STRAND
- ALLOWABLE TENSION IN BOTTOM FIBRE AT MIDSPAN = 2.09 MPa
- CALCULATED MASS OF ONE GIRDER = 15.21 TONNES

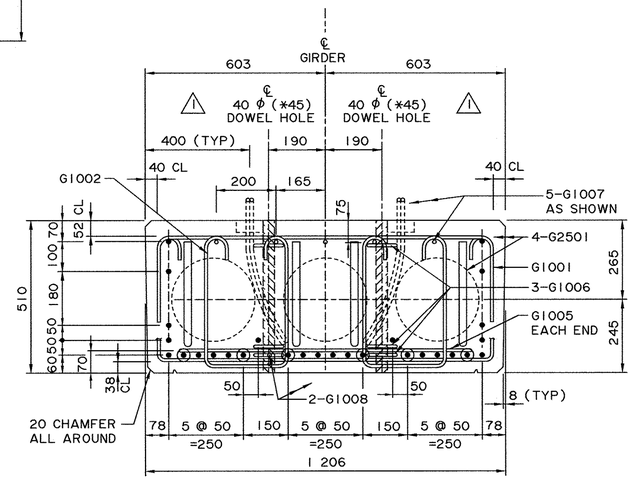


## SECTION A
1:10

* NOTE:
FOR BACKWALL TYPE ABUTMENTS, DOWEL HOLES SHALL BE 45 DIA WITH THE CENTERLINE OF HOLE LOCATED 235 FROM THE END OF GIRDER REFER TO STANDARD DRAWING S-1756 FOR ADDITIONAL DETAILS.

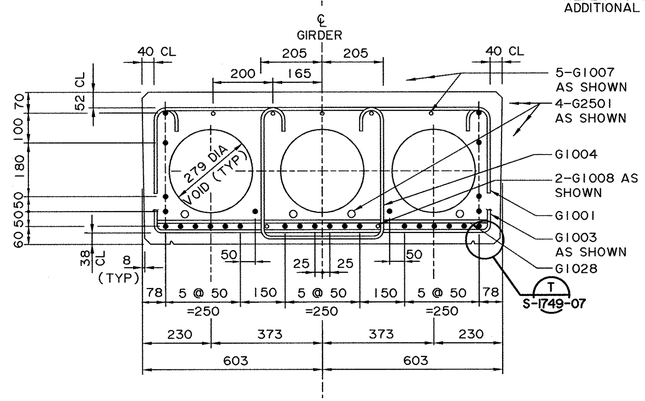


## SECTION B
1:10

- WORK THESE DRAWINGS TOGETHER : S-1731-07, S-1732-07 AND S-1749-07

BPTEC - DNW Engineering Ltd.
Suite 200, 4220-98 St Edmonton, AB T6E 6A1 Ph: (780) 436-5376 Fax: (780) 435-4843
www.bptec-dnw.com
556-46

PERMIT TO PRACTICE BPTEC-DNW ENGINEERING LTD.
Signature Scott Donald
Date SEPT 1, 2007
PERMIT NUMBER: P0132
The Association of Professional Engineers Geologists and Geophysicists of Alberta

DESIGNER — PROFESSIONAL ENGINEER ALBERTA — ORIGINAL STAMPED AND SIGNED BY: Stuart Smith ON: SEPT 1, 2007 — DATE

CHECKER — PROFESSIONAL ENGINEER ALBERTA — ORIGINAL STAMPED AND SIGNED BY: Scott Donald ON: SEPT 1, 2007 — DATE

| REV | DATE | REVISIONS | BY |
|---|---|---|---|
| 6 | | | |
| 5 | | | |
| 4 | | | |
| 3 | | | |
| 2 | | | |
| 1 | 2009-05-14 | REVISED DOWEL HOLE SIZE AND LOCATION | CM |

RECOMMENDED
DIRECTOR BRIDGE ENGINEERING
ORIGINAL SIGNED BY:
TOM LOO

APPROVED
EXECUTIVE DIRECTOR
TECHNICAL STANDARDS BRANCH
ORIGINAL SIGNED BY:
ALLAN KWAN
DATE 2007-09-17

Alberta INFRASTRUCTURE AND TRANSPORTATION

# PRESTRESSED CONCRETE 14 m TYPE SL-510 INTERIOR GIRDER

| AI BAR CODE | DATE | SHEET | DRAWING |
|---|---|---|---|
| | 2007-09-01 | 1 OF 3 | S-1731-07 |

Plotted: 14 m STANDARD SHEET S-1731-07.DGN