NOTE: FOR SKEWED END REINFORCING BAR DETAILS SEE DWG S-1748-07

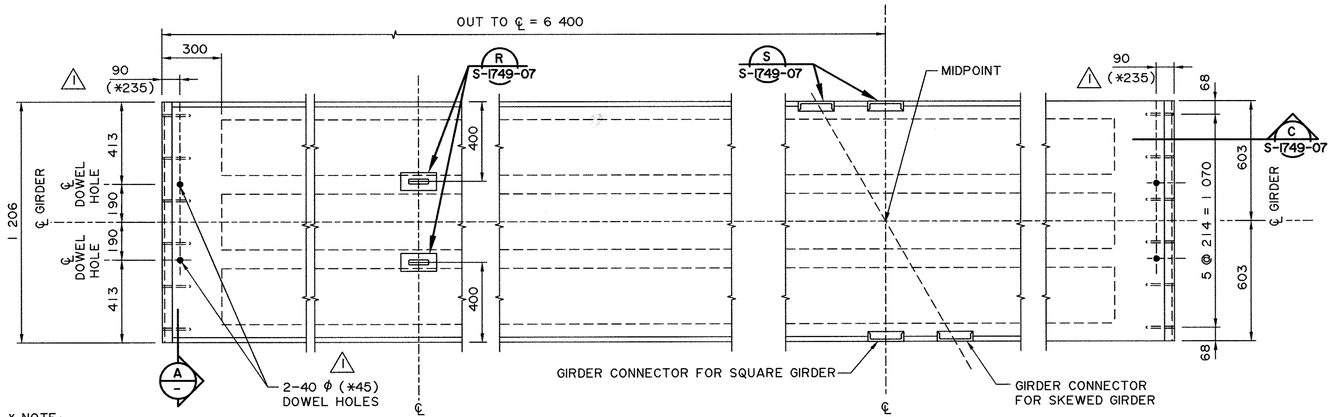

PLAN VIEW
1:15

* NOTE:
FOR BACKWALL TYPE ABUTMENTS, DOWEL HOLES SHALL BE 45 DIA WITH THE CENTERLINE OF HOLE LOCATED 235 FROM THE END OF GIRDER REFER TO STANDARD DRAWING S-1756 FOR ADDITIONAL DETAILS.

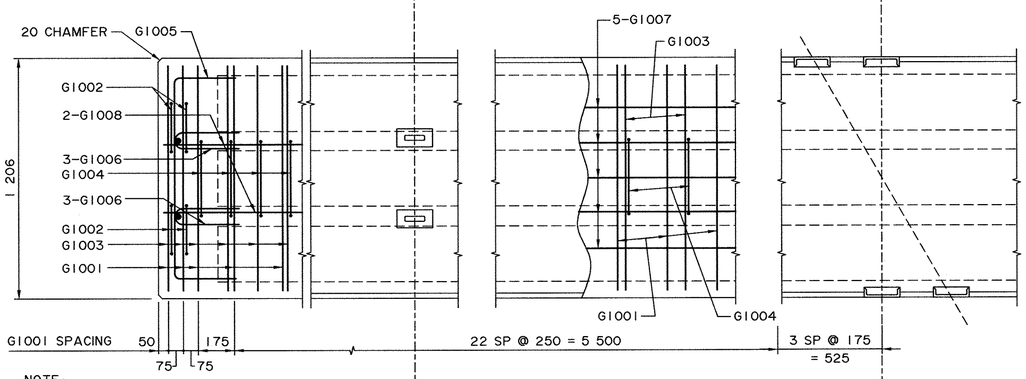

NOTE:
BEND REINFORCING BAR WHERE NECESSARY TO ACCOMMODATE CHANNEL CONNECTORS. STIRRUP SPACING TO BE MAINTAINED.

REINFORCEMENT PLAN
1:15

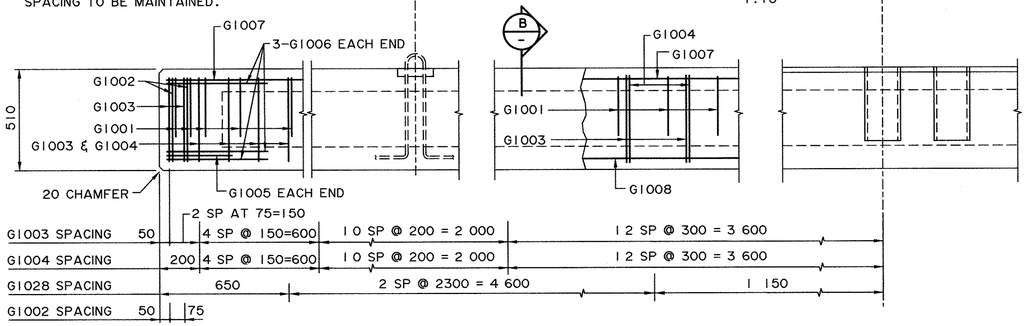

ELEVATION
1:15

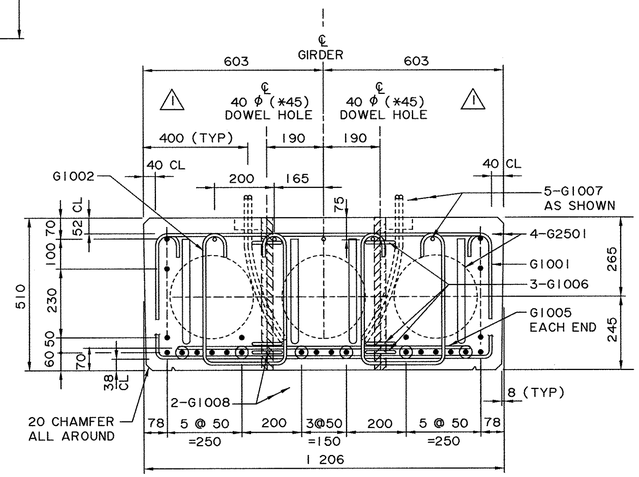

A SECTION
1:10

* NOTE:
FOR BACKWALL TYPE ABUTMENTS, DOWEL HOLES SHALL BE 45 DIA WITH THE CENTERLINE OF HOLE LOCATED 235 FROM THE END OF GIRDER REFER TO STANDARD DRAWING S-1756 FOR ADDITIONAL DETAILS.

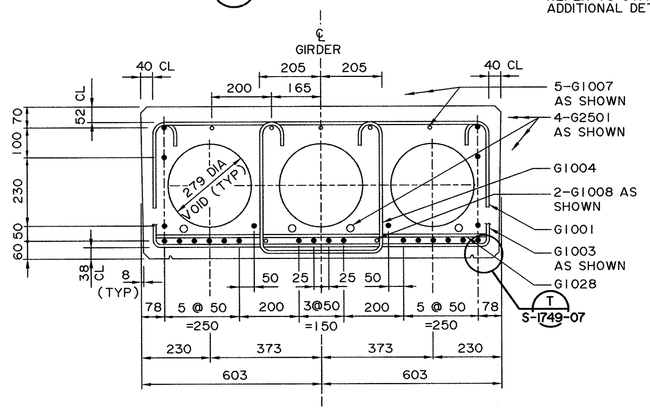

B SECTION
1:10

BAR LIST: FOR SQUARE GIRDER

MARK	SIZE	No.	TYPE	X	Y	LENGTH	MASS
G1001	10	57	A	1 125	300	1 725	77
G1002	10	8	B	280		1 380	9
G1003	10	57	B	1 125		2 225	100
G1004	10	53	B	410		1 510	63
G1005	10	2	A	1 000	300	1 600	3
G1006	10	12	D			1 075	10
G1007	10	5	STR			12 700	50
G1008	10	2	STR			12 600	20
G1028	10	6	STR			1 100	5
G2501	25	4	A	12 650	350	13 350	210

TOTAL PLAIN kg: 547

BAR TYPES

(ALL BAR DIMENSIONS ARE OUT TO OUT)

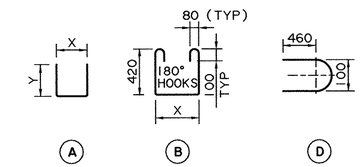

GENERAL NOTES

- FOR ADDITIONAL NOTES, REFER TO DWG S-1749-07.
- 24-15 ϕ 7 WIRE STRANDS REQUIRED PER GIRDER.
- STRANDS MARKED ⊙ ARE TO BE DEBONDED FOR 1400 mm FROM THE GIRDER ENDS.
- FORCE IN PRESTRESSING STEEL:
  INITIAL TENSION BEFORE RELEASE = 195 kN/STRAND
  DESIGN LOAD AFTER LOSSES = 132 kN/STRAND
- CALCULATED MASS OF ONE GIRDER = 13.93 TONNES

- WORK THESE DRAWINGS TOGETHER : S-1747-07, S-1748-07 AND S-1749-07

BPTEC - DNW Engineering Ltd.
Suite 200, 4220-98 St Edmonton, AB T6E 6A1
Ph: (780) 436-5376 Fax: (780) 435-4843
www.bptec-dnw.com
556-46

PERMIT TO PRACTICE BPTEC-DNW ENGINEERING LTD.
Signature Scott Donald
Date AUG 1, 2007
PERMIT NUMBER: P0132
The Association of Professional Engineers Geologists and Geophysicists of Alberta

DESIGNER — PROFESSIONAL ENGINEER ALBERTA — ORIGINAL STAMPED AND SIGNED BY: Stuart Smith ON: AUG 1, 2007 — DATE

CHECKER — PROFESSIONAL ENGINEER ALBERTA — ORIGINAL STAMPED AND SIGNED BY: Scott Donald ON: AUG 1, 2007 — DATE

REV	DATE	REVISIONS	BY
6			
5			
4			
3			
2			
1	2009-05-14	STRAND LOCATIONS ON SECTION "B", DOWEL HOLE SIZE AND LOCATION REVISED	CM

RECOMMENDED DIRECTOR BRIDGE ENGINEERING ORIGINAL SIGNED BY: TOM LOO

APPROVED EXECUTIVE DIRECTOR TECHNICAL STANDARDS BRANCH ORIGINAL SIGNED BY: ALLAN KWAN
DATE 2007-09-17

Alberta INFRASTRUCTURE AND TRANSPORTATION

PRESTRESSED CONCRETE 12.80 m TYPE SL-510 INTERIOR GIRDER

AI BAR CODE	DATE	SHEET	DRAWING
	2007-06-07	1 OF 3	S-1747-07

Plotted: 12.8 m STANDARD SHEET S-1747-07.DGN