DATA FOR STANDARD SL PRECAST GIRDER BRIDGES – ABUTMENTS

CLEAR ROADWAY (GIRDERS/SPAN)		R	8 940 (8)					10 160 (9)					11 370 (10)					12 590 (11)					13 810 (12)					15 020 (13)				
GENERAL	ABUTMENT TYPE		BACKWALL	SPILL THROUGH				BACKWALL	SPILL THROUGH				BACKWALL	SPILL THROUGH				BACKWALL	SPILL THROUGH				BACKWALL	SPILL THROUGH				BACKWALL	SPILL THROUGH			
	SKEW		0°	0°	15°	30°	45°	0°	0°	15°	30°	45°	0°	0°	15°	30°	45°	0°	0°	15°	30°	45°	0°	0°	15°	30°	45°	0°	0°	15°	30°	45°
	OVERALL LENGTH	A	12 740	9 920	10 270	11 455	14 029	13 960	11 140	11 533	12 863	15 754	15 170	12 350	12 786	14 261	17 466	16 390	13 570	14 049	15 669	19 191	17 610	14 790	15 312	17 078	20 916	18 820	16 000	16 564	18 475	22 627
	CROWN	B	127	99	99	99	99	140	111	111	111	111	152	124	124	124	124	164	136	136	136	136	176	148	148	148	148	188	160	160	160	160
	DIFFERENTIAL FOR ROADWAY GRADE OF 1%	C	0	0	27	57	99	0	0	30	64	111	0	0	33	71	124	0	0	36	78	136	0	0	40	85	148	0	0	43	92	160
	DIFFERENTIAL FOR ROADWAY GRADE OF 2%	C	0	0	53	115	198	0	0	60	129	223	0	0	66	143	247	0	0	73	157	271	0	0	79	171	296	0	0	86	185	320
	DIFFERENTIAL FOR ROADWAY GRADE OF 3%	C	0	0	80	172	298	0	0	90	193	334	0	0	99	214	371	0	0	109	235	407	0	0	119	256	444	0	0	129	277	480
PILES	NUMBER – LOAD BEARING		6	6	6	6	6	7	7	7	7	7	8	8	8	8	8	9	9	9	9	9	9	9	9	9	9	10	10	10	10	10
	SPACING	D	1 642	1 642	1 700	1 896	2 322	1 572	1 572	1 627	1 815	2 223	1 520	1 520	1 574	1 755	2 150	1 482	1 482	1 534	1 711	2 096	1 635	1 635	1 693	1 888	2 312	1 588	1 588	1 644	1 834	2 246
	END DISTANCES	E	855	855	885	987	1 209	855	855	885	987	1 209	855	855	885	987	1 209	855	855	885	987	1 209	855	855	885	987	1 209	855	855	885	987	1 209
	WINGWALL PILE LOCATION	F	1 665	1 623	1 680	1 874	2 295	1 664	1 693	1 753	1 955	2 394	1 665	1 745	1 807	2 015	2 468	1 667	1 783	1 846	2 059	2 522	1 665	1 630	1 688	1 882	2 305	1 664	1 677	1 736	1 936	2 372
	WINGWALL PROJECTION	G	600	600	621	693	849	600	600	621	693	849	600	600	621	693	849	600	600	621	693	849	600	600	621	693	849	600	600	621	693	849
NUMBER OF DOWELS PER LINE			16	16	16	16	16	18	18	18	18	18	20	20	20	20	20	22	22	22	22	22	24	24	24	24	24	26	26	26	26	26
EXTERIOR GIRDER LOCATION FROM ℄ BRIDGE		M	4 859	4 859	5 030	5 611	6 872	5 467	5 467	5 660	6 313	7 732	6 075	6 075	6 289	7 015	8 591	6 683	6 683	6 919	7 717	9 451	7 291	7 291	7 548	8 419	10 311	7 899	7 899	8 178	9 121	11 171

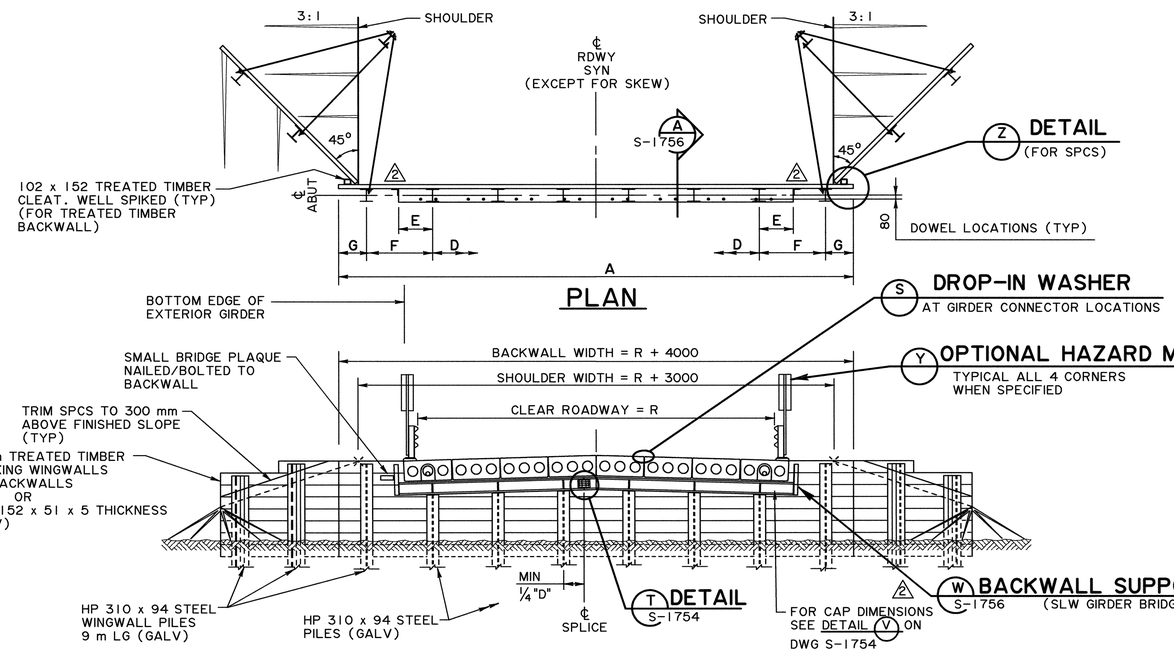

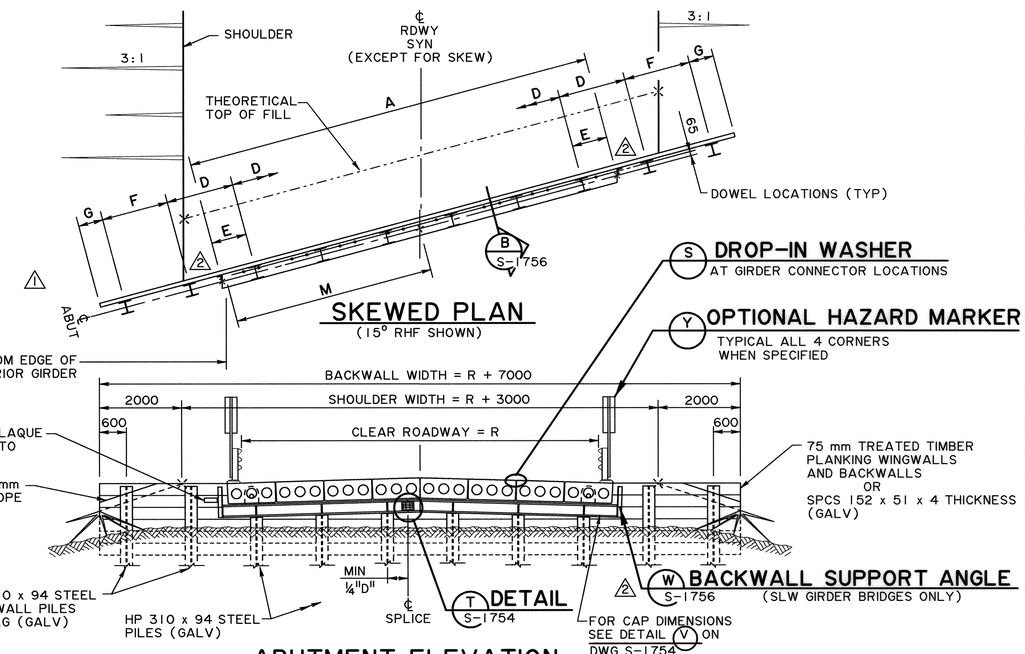

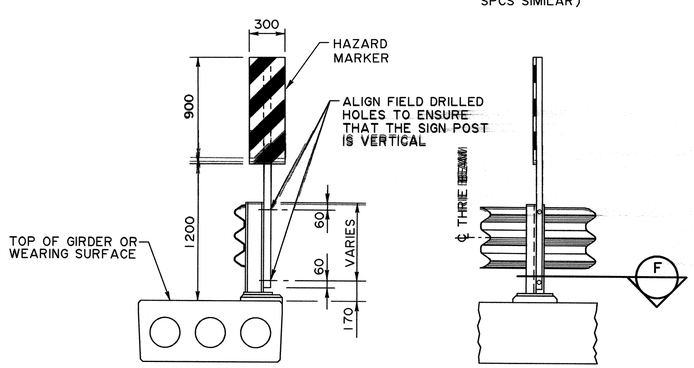

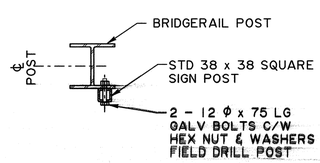

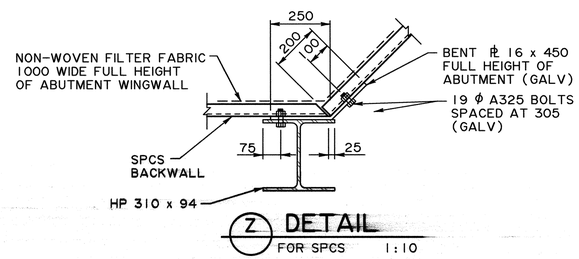

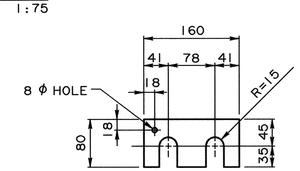

2 • WORK DRAWINGS S-1753, S-1754, S-1755 AND S-1756 TOGETHER WITH SITE SPECIFIC GENERAL LAYOUT

MOST Engineering (2001) Ltd.

PERMIT TO PRACTICE MOST ENGINEERING (2001) LTD.
ORIGINAL STAMPED AND SIGNED
Signature W. POLANICA
Date 2008-08-15
PERMIT NUMBER: P 8859
The Association of Professional Engineers, Geologists and Geophysicists of Alberta

DESIGNER — PROFESSIONAL ENGINEER ALBERTA — ORIGINAL STAMPED AND SIGNED BY W. POLANICA ON 2008-08-15 — DATE

CHECKER — PROFESSIONAL ENGINEER ALBERTA — ORIGINAL STAMPED AND SIGNED BY ATIF F. SHAKER ON 2008-08-15 — DATE

REV	DATE	REVISIONS	BY
6			
5			
4			
3			
2	2012-02-29	NOTES & SUPPORT ANGLE DETAIL	CM
1	2009-07-15	DIMENSION REMOVED	CM

RECOMMENDED
DIRECTOR BRIDGE ENGINEERING
ORIGINAL SIGNED BY TOM LOO

APPROVED
EXECUTIVE DIRECTOR TECHNICAL STANDARDS BRANCH
ORIGINAL SIGNED BY ALLAN KWAN
DATE SEPT 8, 2008

Alberta Transportation

SL PRECAST GIRDER BRIDGES WITH STEEL SUBSTRUCTURES SHEET 3

AT BAR CODE	DATE	SHEET	DRAWING
	2008-08-18	3 OF 4	S-1755-08

NH 2012-02-29 S-1754-08.RVJ.DGN