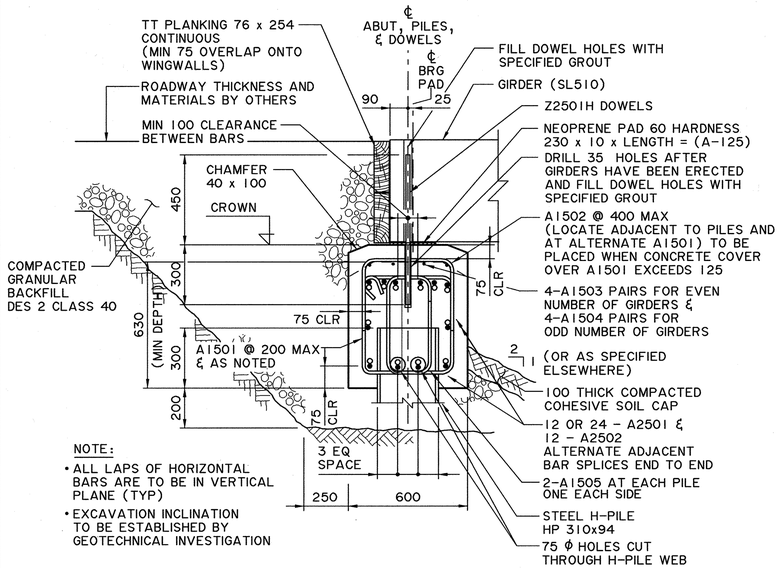

A ABUTMENT SECTION
S-1762-08 1:15

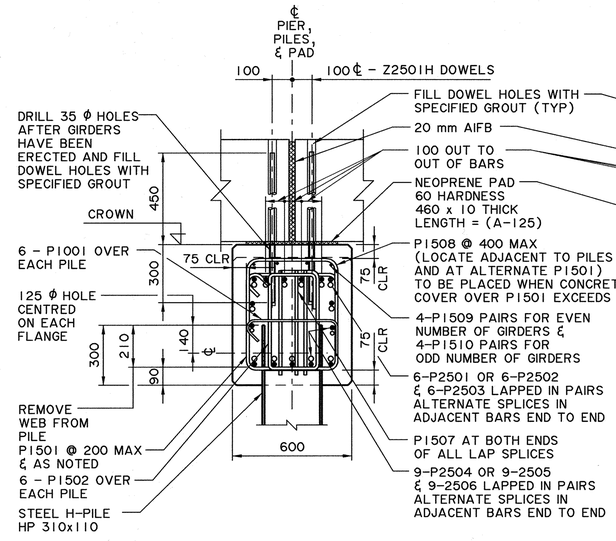

H-PILE PIER

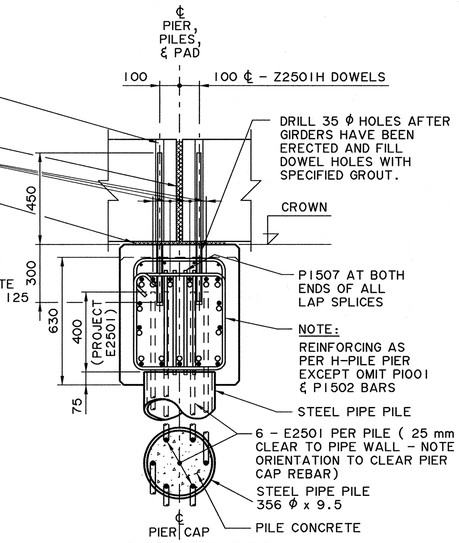

PIPE PILE PIER

B PIER SECTION
S-1762-08 1:15

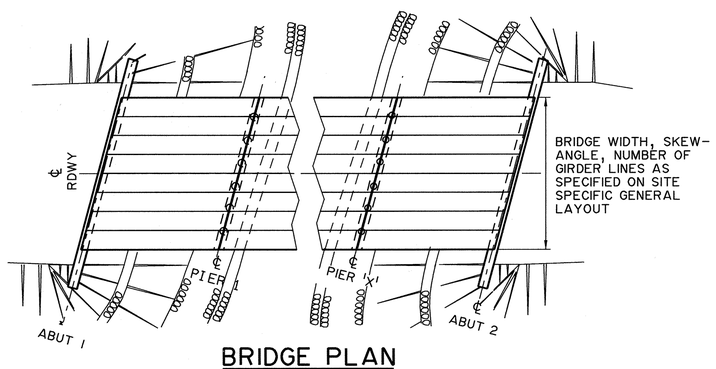

BRIDGE PLAN
NTS

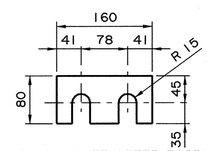

HOT DIP GALVANIZE AFTER FABRICATION

DROP-IN WASHER
• FOR SL-510 GIRDER TO GIRDER CONNECTIONS IN 2mm AND 4mm THICKNESSES USE 2-19mm DIAMETER A325 BOLTS (GALVANIZED) 1:5

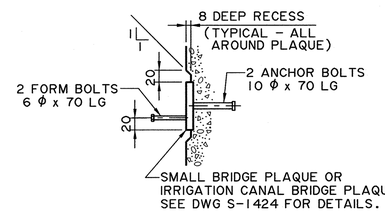

R BRIDGE PLAQUE
S-1762-08 1:5

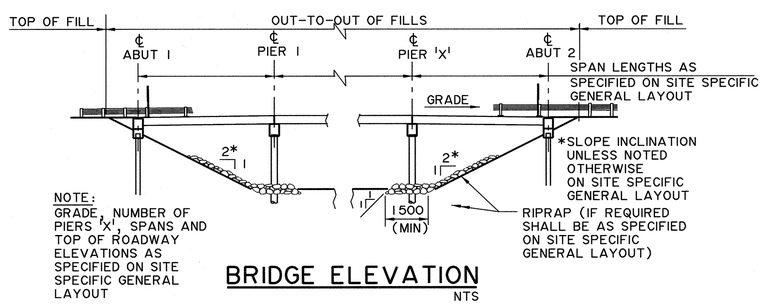

BRIDGE ELEVATION
NTS

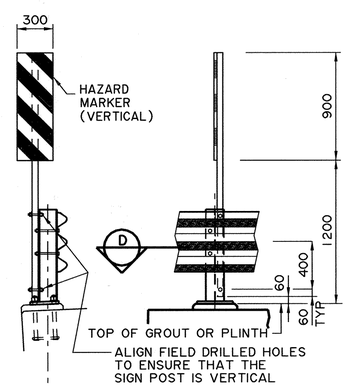

S HAZARD MARKER DETAILS
S-1762-08 (SHOWN AS FOR PL-1 THRIE BEAM BRIDGERAIL) 1:25
2 REQ'D - RIGHT HAND } REQUIRED IF SPECIFIED IN SITE
2 REQ'D - LEFT HAND } SPECIFIC GENERAL LAYOUT

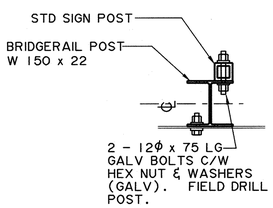

D SECTION
1:10

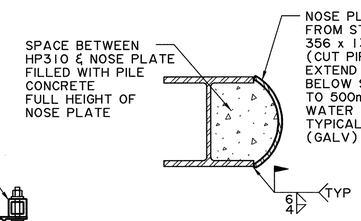

E SECTION
S-1762-08 (FOR UPSTREAM 1:10
HP 310x110 PILE ONLY)

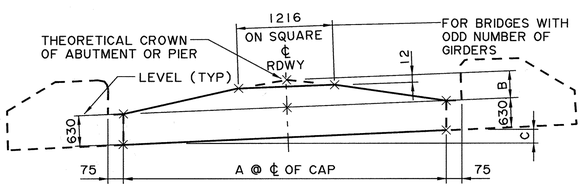

Q VERTICAL DIMENSIONING DETAIL
S-1762-08 NTS

CONSTRUCTION

- ALL CONSTRUCTION WORK SHALL CONFORM TO THE CURRENT SPECIFICATIONS FOR BRIDGE CONSTRUCTION (BCS).
- WELDING SHALL CONFORM TO SPECIFICATION SECTION 13.4.1 "FIELD WELDING OF STRUCTURAL MEMBERS".
- PILES SHALL BE DRIVEN TO THE TIP ELEVATIONS SHOWN ON THE DRAWINGS, OR LOWER, TO ACHIEVE AT LEAST THE SPECIFIED MINIMUM BEARING CAPACITY. THE BEARING CAPACITIES SHALL BE ESTIMATED USING THE BEARING FORMULAS PRESENTED IN THE CURRENT SPECIFICATIONS FOR BRIDGE CONSTRUCTION.
- AFTER PILE DRIVING OPERATIONS HAVE STARTED, THE CONSULTANT MAY REVISE THE REQUIRED PILE TIP ELEVATIONS, PROVIDED THAT THE MINIMUM SPECIFIED BEARING CAPACITY AND SPECIFIED MINIMUM PILE PENETRATION HAVE BEEN ACHIEVED.

MINIMUM BEARING CAPACITY - SERVICE LOADS

ABUT PILES (kN)	SPANS	PIER PILES (kN) 14m	12m	10m	8m	6m
320	6m	690	640	590	530	490
370	8m	730	680	630	570	
410	10m	770	720	670		
460	12m	810	750			
510	14m	850				

MINIMUM BEARING CAPACITY - ULTIMATE LOADS

ABUT PILES (kN)	SPANS	PIER PILES (kN) 14m	12m	10m	8m	6m
500	6m	1010	940	870	770	730
570	8m	1060	990	920	830	
630	10m	1110	1040	970		
690	12m	1160	1080			
760	14m	1220				

- PIER PILES SHALL PENETRATE AT LEAST 5 m BELOW STREAMBED
- PILE TOLERANCES AS PER SPECIFICATIONS FOR BRIDGE CONSTRUCTION EXCEPT THAT BOTH PIER AND ABUTMENT PILES SHALL NOT BE OUT OF SPECIFIED POSITION BY MORE THAN 25mm.

- ALL REINFORCEMENT SHALL HAVE A CLEAR CONCRETE COVER OF 75 mm UNLESS NOTED OTHERWISE.
- PILE CONCRETE SHALL BE CURED AT LEAST 12 HOURS BEFORE PLACING PIER CAP CONCRETE.
- ALL CORNERS SHALL HAVE A 20 mm CHAMFER OR FILLET UNLESS NOTED OTHERWISE.
- ALL EXPOSED CONCRETE SURFACES EXCEPT BEARING AREAS SHALL BE GIVEN A CLASS 2 FINISH.
- TREATED TIMBER (TT) SHALL BE HANDLED TO AVOID BRUISING, BREAKING OR PENETRATION OF OUTER FIBRES. LIFTING TOOLS SHALL BE APPLIED ONLY ON ENDS OF TT PIECES. ALL CUTS AND BRUISES SHALL BE CAREFULLY TRIMMED AND REPAIRED IN ACCORDANCE WITH SECTION 23 OF BCS AND TO THE SATISFACTION OF THE CONSULTANT.

MATERIALS

- ALL CONCRETE SHALL BE CLASS C, OR PILE CONCRETE FOR PIPE PILE INFILL. SULPHATE RESISTANT PORTLAND CEMENT (TYPE HS) SHALL BE USED FOR ALL CONCRETE IF DETERMINED NECESSARY FROM GEOTECHNICAL INVESTIGATION FINDINGS.
- REINFORCING STEEL SHALL CONFORM TO G30.18M GRADE 400. REBAR BENDING DETAILS SHALL CONFORM TO THE CURRENT REQUIREMENTS OF THE MANUAL OF STANDARD PRACTICE OF REINFORCING STEEL INSTITUTE OF CANADA.
- GIRDER DOWELS SHALL BE FABRICATED FROM SMOOTH ROUND BAR STOCK CONFORMING TO ASTM A193-B7 (Fy = 725MPa, Fu = 860MPa). GALVANIZING SHALL STRICTLY FOLLOW THE FOLLOWING PROCEDURE WITHIN THE PRESENCE OF THE CONSULTANT:
  - BRUSH BLAST DOWELS TO REMOVE MILL SCALE AND OIL.
  - FLASH PICKLING NOT TO EXCEED 5 MINUTES.
  - QUICK DRY PRIOR TO HOT-DIP GALVANIZING (DO NOT STORE IN FLUX OR ACID RINSE.)
- ALL STEEL PLATE AND SHAPES SHALL CONFORM TO THE REQUIREMENTS OF CSA G40.21M GRADE 350W EXCEPT PIPE MATERIAL WHICH SHALL CONFORM TO THE REQUIREMENTS OF ASTM 252 GRADE 2 (Fy = 240MPa).
- PIER PILES AND BRACES SHALL BE HOT-DIPPED GALVANIZED. GALVANIZING MAY BE OMITTED FROM PILE SURFACES LOCATED MORE THAN 1000 mm BELOW GROUNDLINE. ALL FIELD WELDS OF GALVANIZED MATERIAL SHALL BE TOUCHED-UP WITH MINIMUM TWO COATS OF DEPARTMENT APPROVED ZINC-RICH PAINT AND ARE SUBJECT TO THE APPROVAL OF THE CONSULTANT.
- GALVANIZING SHALL CONFORM TO THE CURRENT CSA STANDARD G164.
- ALL WELDING SHALL CONFORM TO THE CURRENT AWS SPECIFICATION D1.5.
- TREATED TIMBER (TT) SHALL CONFORM TO SECTION 23 OF THE SPECIFICATIONS FOR BRIDGE CONSTRUCTION.
- GRANULAR BACKFILL SHALL BE PLACED TO A MINIMUM OF 95% PROCTOR DENSITY AND OTHERWISE CONFORM TO THE SPECIFICATIONS FOR BRIDGE CONSTRUCTION.
- BEARING PADS SHALL MEET THE REQUIREMENTS OF ASTM - AASHTO GRADE 5, 60 DURO HARDNESS.
- DOWEL HOLE GROUT TO BE SIKA 212 MINIMUM 28 DAY STRENGTH = 40MPa.
- ASPHALT IMPREGNATED FIBREBOARD (AIFB) SHALL CONFORM TO THE CURRENT ASTM SPECIFICATION D1751 FOR PREFORMED EXPANSION JOINT FILLER.

WORK DRAWINGS S-1762-08, S-1763-08, AND S-1764-08 TOGETHER WITH SITE SPECIFIC GENERAL LAYOUT

CH2MHILL

PERMIT TO PRACTICE
CH2M HILL Canada Limited
PERMIT NUMBER: P 2558
The Association of Professional Engineers, Geologists and Geophysicists of Alberta

DESIGNER — PROFESSIONAL ENGINEER DAVID GUOQIANG WU ALBERTA — DATE Dec. 05, 2008

CHECKER — PROFESSIONAL ENGINEER MARY J. KRITZER ALBERTA — DATE Dec 5, 2008

REV	DATE	REVISIONS	BY
6			
5			
4			
3			
2			
1			

RECOMMENDED DIRECTOR BRIDGE ENGINEERING — Tom Loo

APPROVED EXECUTIVE DIRECTOR TECHNICAL STANDARDS BRANCH — DATE DEC. 11/08

Alberta TRANSPORTATION

SL PRECAST GIRDER BRIDGES WITH CAST-IN-PLACE CONCRETE SUBSTRUCTURES - SHT 2

DEPARTMENT BAR CODE	DATE	SHEET	DRAWING
	2008-12-05	2 OF 3	S-1763-08