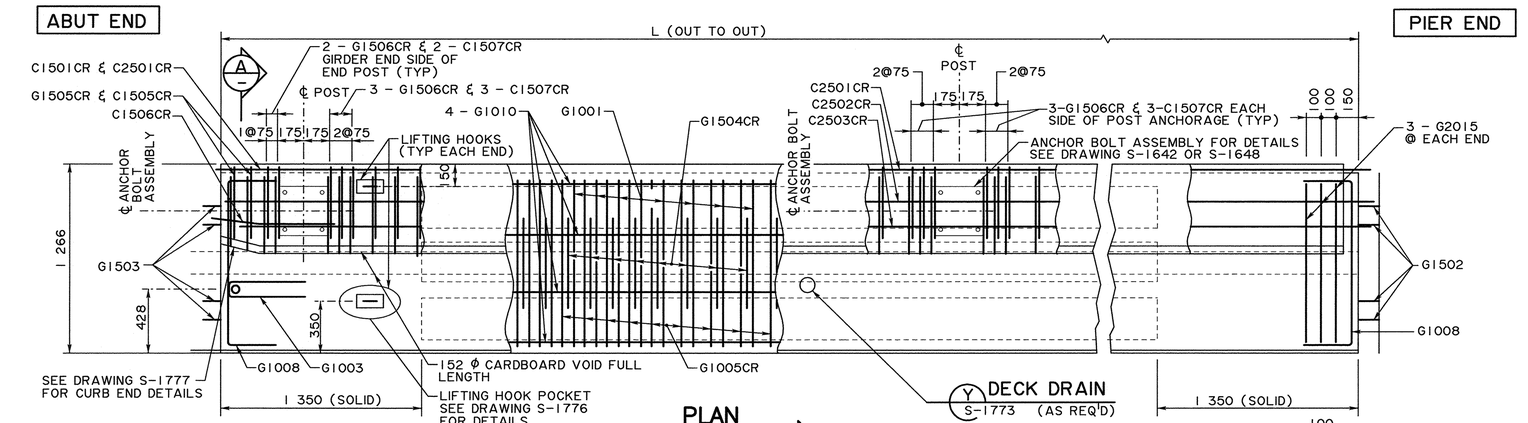

PLAN
1:20

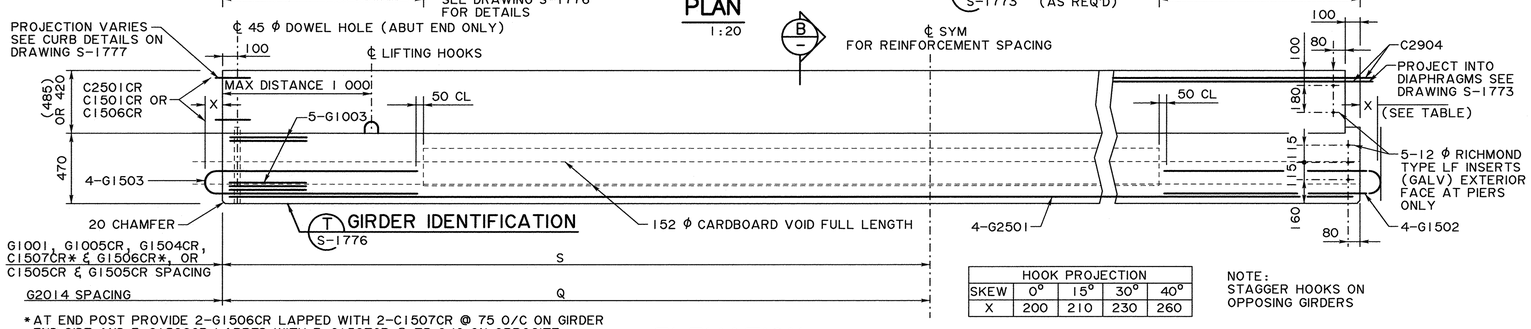

HOOK PROJECTION				
SKEW	0°	15°	30°	40°
X	200	210	230	260

NOTE:
STAGGER HOOKS ON OPPOSING GIRDERS

*AT END POST PROVIDE 2-G1506CR LAPPED WITH 2-C1507CR @ 75 O/C ON GIRDER END SIDE AND 3-G1506CR LAPPED WITH 3-C1507CR @ 75 O/C ON OPPOSITE SIDE OF ANCHORAGE

AT REMAINING POST ANCHORAGE LOCATIONS PROVIDE 3-G1506CR LAPPED WITH 3-C1507CR @ 75 O/C EACH SIDE OF ANCHORAGE

BETWEEN POST ANCHORAGE LOCATIONS PROVIDE G1506CR LAPPED WITH C1507CR AT STIRRUP SPACING S

ELEVATION
1:20

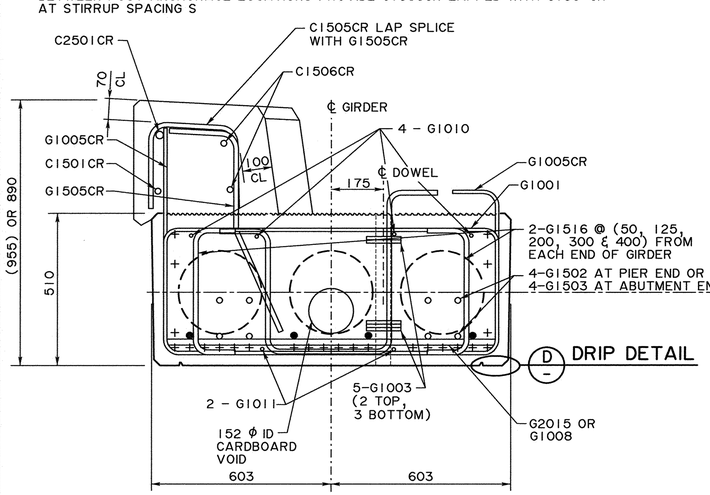

TAPERED CURB END SECTION
1:10

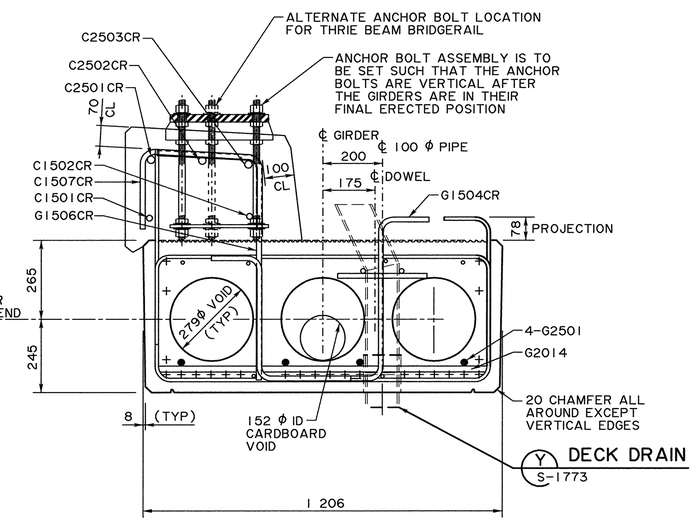

SECTION
1:10

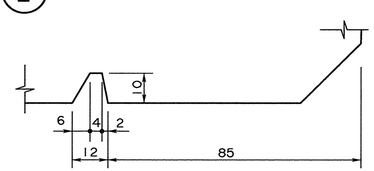

DRIP DETAIL
1:1

BAR LIST: CURB GIRDER

MARK	SIZE	TYPE	X	Y	LENGTH
G1001	10	A	1125	390	1 905
G1003	10	J	100	510	1 080
G1005CR	10	C	1125		2585 (2650)
G1008	10	A	1000	300	1 600
G1010	10	STR	FULL LENGTH OF GIRDER		
G1011	10	STR	FULL LENGTH OF GIRDER		
G1502	15	J	140	VARIES	VARIES
G1503	15	J	140	VARIES	VARIES
G1504CR	15	W	405		1715
G1505CR	15	Q	150	VARIES	VARIES
G1506CR	15	D	350	17	1100 (1165)
G1516	15	S	420	140	700
G2014	20	STR			1 100
G2015	20	STR			950
G2501	25	STR	FULL LENGTH OF GIRDER		
C1501CR	15	STR	FULL LENGTH OF GIRDER		
C1502CR	15	STR	FULL LENGTH OF GIRDER		
C1505CR	15	G	VARIES	VARIES	VARIES
C1506CR	15	H			915
C1507CR	15	G	425	20	945 (1075)
C2501CR	25	STR	FULL LENGTH OF GIRDER		
C2502CR	25	STR	FULL LENGTH OF GIRDER		
C2503CR	25	STR	FULL LENGTH OF GIRDER		
C2904	29	STR	(GALVANIZED DYWIDAG BAR)		2370

- SUFFIX LETTER " CR " ON BAR MARK DENOTES CORROSION RESISTANT REINFORCING BARS

GENERAL NOTES

MATERIALS

- GIRDER CONCRETE SHALL BE IN ACCORDANCE WITH SECTION 7, PRECAST CONCRETE UNITS AND HAVE A 28 DAY STRENGTH OF 50 MPa AND A RELEASE STRENGTH OF 30 MPa
- CONCRETE FOR CURBS SHALL BE STANDARD WEIGHT CONCRETE WITH A 28 DAY STRENGTH OF 50 MPa
- PRESTRESSING STEEL SHALL BE 15 (15.2 mm) ϕ, 7 WIRE LOW RELAXATION STRAND (fpu= 1860 MPa) IN ACCORDANCE WITH ASTM A416
- REINFORCING STEEL SHALL BE IN ACCORDANCE WITH SECTION 5 OF THE STANDARD SPECIFICATION FOR BRIDGE CONSTRUCTION (TACK WELDING OF STIRRUPS WILL NOT BE PERMITTED)

FABRICATION

- GIRDERS SHALL CONFORM TO THE CURRENT REQUIREMENTS OF THE STANDARD SPECIFICATIONS FOR BRIDGE CONSTRUCTION SECTION 7 - PRECAST CONCRETE UNITS
- FABRICATORS SHALL INCLUDE ALL FABRICATION PRESTRESS LOSSES TO DETERMINE THE JACKING FORCE REQUIRED TO PROVIDE THE SPECIFIED INITIAL FORCE PER STRAND IMMEDIATELY PRIOR TO TRANSFER
- CURBS FOR CURB GIRDERS SHALL BE PLANT CAST AFTER RELEASE OF STRANDS
- SURFACE ROUGHENING OF GIRDER ENDS SHALL BE IN ACCORDANCE WITH SECTION 7 OF THE STANDARD SPECIFICATIONS FOR BRIDGE CONSTRUCTION
- SKEW END DETAILS SHALL BE IN ACCORDANCE WITH STANDARD DRAWING S-1776
- ALL EXPOSED CORNERS TO HAVE A 20 mm CHAMFER OR FILLET UNLESS OTHERWISE NOTED
- GIRDER CONCRETE SURFACE FINISHES SHALL BE IN ACCORDANCE WITH STANDARD DRAWING S-1852
- DECK DRAIN DETAILS AND LOCATIONS SHALL BE IN ACCORDANCE WITH STANDARD DRAWINGS S-1771 AND S-1773
- BRIDGERAIL POST SPACINGS SHALL BE IN ACCORDANCE TO SITE SPECIFIC DRAWINGS

ERECTION

- FOR THEORETICAL GIRDER WEIGHTS REFER TO STANDARD DRAWING S-1774
- LIFTING FORCE ANGLE SHALL NOT EXCEED 60° FROM HORIZONTAL
- GIRDER SHALL REMAIN LEVEL AT ALL TIMES

NOTE:
- FOR BAR TYPES SEE DRAWING S-1774
- FOR DIMENSIONS THAT VARY WITH CURB HEIGHT, DIMENSIONS ARE GIVEN AS:

XXX FOR 350 CURB
(XXX) FOR 415 CURB

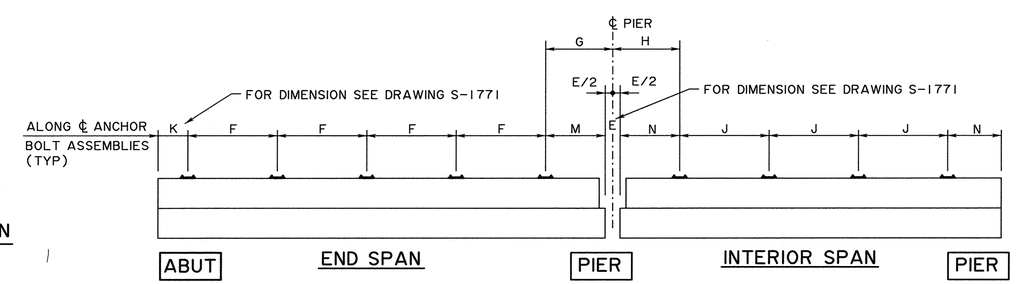

NOTE:
DIMENSION F, M, N, G, H & J SHALL BE SHOWN ON THE SITE SPECIFIED DRAWINGS

BRIDGERAIL ANCHOR BOLT SPACING

- FOR ADDITIONAL GENERAL NOTES SEE DRAWING S-1771

REV	DATE	REVISION	BY
5			
4			
3			
2			
1			

DESIGNER RI CHECKER KA

RECOMMENDED DIRECTOR BRIDGE ENGINEERING

APPROVED EXECUTIVE DIRECTOR TECHNICAL STANDARDS BRANCH

DATE Oct 06, 2022

Alberta Transportation

STANDARD SLC COMPOSITE BRIDGES
SLC510 PRESTRESSED CONCRETE GIRDERS
CURB GIRDER

DATE	SHEET	DRAWING
2020-11-17	5 OF 7	S-1775-20