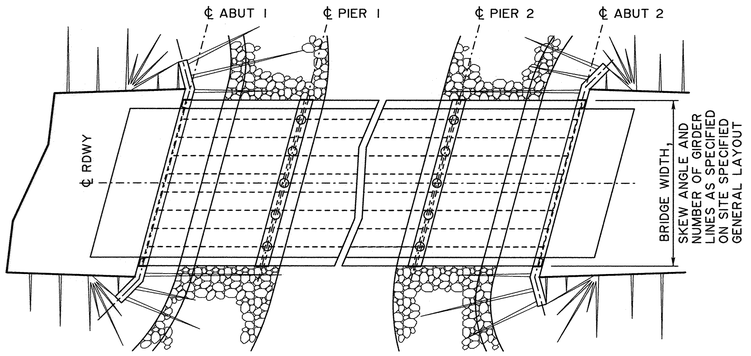

BRIDGE PLAN

NTS

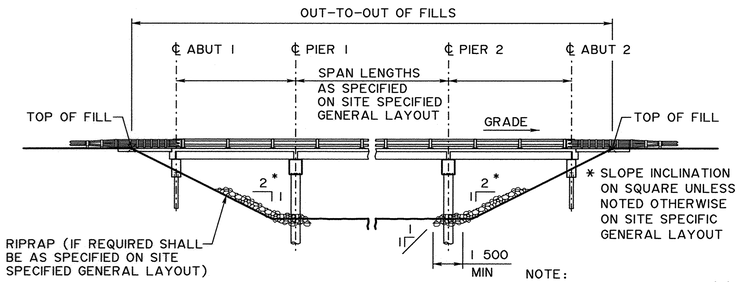

NOTE:
GRADE, NUMBER OF PIERS 'X', SPANS AND TOP OF ROADWAY ELEVATIONS AS SPECIFIED ON SITE SPECIFIC GENERAL LAYOUT

BRIDGE ELEVATION

NTS

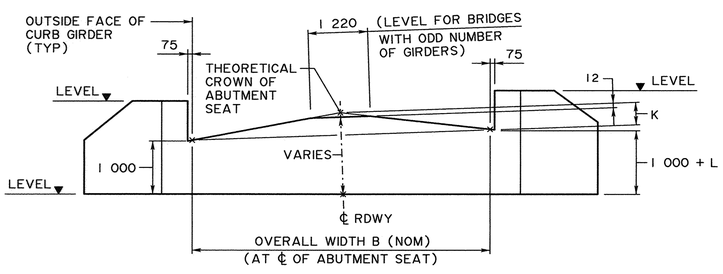

ABUTMENT VERTICAL DIMENSIONING DETAIL

(ON SQUARE) NTS

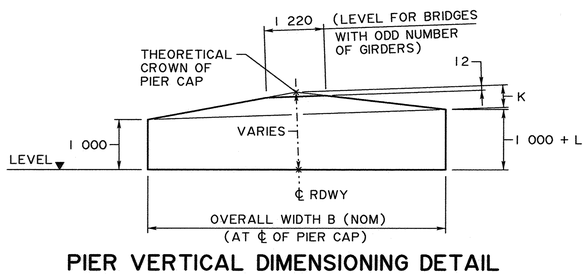

PIER VERTICAL DIMENSIONING DETAIL

(ON SQUARE) NTS

GENERAL NOTES

- SCALES WHERE INDICATED ARE APPLICABLE FOR FULL SIZE A1 DRAWING LAYOUT
- ALL DRAWING REFERENCES REFER TO CURRENT DRAWINGS
- ROADWAY ELEVATIONS SPECIFIED ELSEWHERE ARE GIVEN TO TOP OF THEORETICAL CROWN ON CENTERLINE ROADWAY

GEOTECHNICAL

- A GEOTECHNICAL INVESTIGATION SHALL BE COMPLETED BY A GEOTECHNICAL ENGINEER. THE GEOTECHNICAL INVESTIGATION SHALL VERIFY THE DESIGN AND CONSTRUCTION ASSUMPTIONS ON THESE DRAWINGS AND PROVIDE ADDITIONAL INFORMATION WHERE REQUIRED. THE GEOTECHNICAL INVESTIGATION WILL BE CONSIDERED A PROFESSIONAL WORK PRODUCT AND SHALL BE AUTHENTICATED BY A PROFESSIONAL GEOTECHNICAL ENGINEER LICENSED TO PRACTICE IN THE PROVINCE OF ALBERTA AND VALIDATED BY A RESPONSIBLE MEMBER, IN ACCORDANCE WITH APEGA REQUIREMENTS
- THE PILE SET CRITERIA AND TIP ELEVATIONS SHALL BE DETERMINED BY THE GEOTECHINCAL ENGINEER. PILE LOADS SHALL BE IN ACCORDANCE WITH TABLES 1 AND 2

TABLE 1: BEARING CAPACITY 510 x 1 206 (SLS)

SPAN (m) ARRANGEMENT	PIER PILE (kN)	ABUT PILE (kN)
8	–	340
8-8-8	610	
8-10-8	660	
8-12-8	710	
8-14-8	765	
10	–	385
10-10-10	710	
10-12-10	760	
10-14-10	815	
10-16-10	865	
12	–	430
12-12	825	
12-12-12	815	
12-14-12	860	
12-16-12	910	
14	–	470
14-14	925	
14-14-14	915	
14-16-14	955	
16	–	520
16-16-16	1000	

TABLE 2: BEARING CAPACITY 510 x 1 206 (ULS)

SPAN (m) ARRANGEMENT	PIER PILE (kN)	ABUT PILE (kN)
8	–	510
8-8-8	865	
8-10-8	935	
8-12-8	1005	
8-14-8	1085	
10	–	570
10-10-10	1010	
10-12-10	1080	
10-14-10	1155	
10-16-10	1230	
12	–	635
12-12	1180	
12-12-12	1155	
12-14-12	1225	
12-16-12	1290	
14	–	695
14-14	1320	
14-14-14	1295	
14-16-14	1355	
16	–	760
16-16-16	1420	

HYDROTECHNICAL

- IT IS THE RESPONSIBILITY OF OTHERS USING THESE SUBSTRUCTURE DRAWINGS TO COMPLETE A SITE SPECIFIC HYDROTECHNICAL ASSESSMENT IN ORDER TO ESTABLISH THE REQUIRED BRIDGE OPENING, TO CONFIRM THE SUITABILITY OF THE DESIGN ASSUMPTIONS LISTED ON THESE DRAWINGS AND TO SUPPLEMENT THESE ASSUMPTIONS WHERE REQUIRED. CONSULTATION WITH A QUALIFIED PROFESSIONAL ENGINEER WITH HYDROTECHNICAL EXPERIENCE PRIOR TO THE DESIGN PHASE IS REQUIRED

NUMBER OF GIRDER LINES	CLEAR ROADWAY WIDTH 'C' (NOM)	OVERALL WIDTH 'B' (NOM)
8	8 720	9 870
9	9 940	11 090
10	11 160	12 310
11	12 380	13 530
12	13 600	14 750
13	14 820	15 970

SPAN TABLE

SPAN				
8 m	10 m	12 m	14 m	16 m
8-8-8 m	10-10-10 m	12-12 m	14-14 m	16-16-16 m
8-10-8 m	10-12-10 m	12-12-12 m	14-14-14 m	
8-12-8 m	10-14-10 m	12-14-12 m	14-16-14 m	
8-14-8 m	10-16-10 m	12-16-12 m		

DESIGN LOADS AND ASSUMPTIONS

- **DESIGN SPECIFICATION:** CAN/CSA-S6-19
- **DESIGN VEHICLE:** CL-800
- **DEAD LOAD:** ABUTMENT AND PIER CAP SELF-WEIGHT, GIRDER SELF-WEIGHT AND WEARING SURFACE ALLOWANCE AS PER STANDARD SLC COMPOSITE BRIDGE GIRDER DRAWINGS S-1771, S-1772, S-1773, S-1774, S-1775, S-1776 AND S-1777
- **ICE LOADS:** THE FOLLOWING LIMITING ASSUMPTIONS WERE USED FOR PIER DESIGN AND THESE DRAWINGS SHOULD NOT BE USED WHEN THESE DESIGN CONDITIONS ARE EXCEEDED:
  - EFFECTIVE CRUSHING STRENGTH p = 700 kPa
  - MAXIMUM ICE THICKNESS = 600 mm
  - FLOW ANGLE BETWEEN AXIS OF PIER AND STREAM = 0 DEGREES
  - MAXIMUM HEIGHT OF DECK SURFACE ABOVE STREAMBED = 7.7 m
  - HEIGHT OF ICE FORCE ABOVE STREAM BED:
    = MINIMUM 1.0 m
    = MAXIMUM 1.0 m BELOW UNDERSIDE OF BOX GIRDERS
- **EARTH PRESSURE:** THE FOLLOWING LIMITING ASSUMPTIONS WERE USED FOR SUBSTRUCTURE DESIGN. THESE DRAWINGS SHOULD NOT BE USED WHEN ACTUAL SITE CONDITIONS RESULT IN MORE SEVERE LOAD EFFECTS OR LESS EFFECTIVE RESISTANCE:
  - UNIT WEIGHT OF SOIL, γ = 22 kN/m3
  - COEFFICIENT OF ACTIVE PRESSURE, ka = 0.50 (NON-FACTORED)
  - HORIZONTAL SUBGRADE REACTION, ks = 20 000 kN/m2 FOR 610 mm DIAMETER PILE
  - MAXIMUM HORIZONTAL DISTANCE FROM TOP OF FILL MEASURED PERPENDICULAR TO BURIED FACE OF ABUTMENT = 1.9 m
  - MAXIMUM HEAD SLOPE INCLINATION, 2H : 1V
- **SEISMIC:** THE FOLLOWING LIMITING ASSUMPTIONS WERE USED FOR SEISMIC ANALYSIS OF BRIDGE STRUCTURE. THESE DRAWINGS SHOULD NOT BE USED WHEN ACTUAL SITE CONDITIONS RESULT IN MORE SEVERE LOAD EFFECTS OR LESS EFFECTIVE RESISTANCE:
  - IMPORTANT CATEGORY = OTHER BRIDGES
  - SEISMIC PERFORMANCE CATEGORY = 2
- **THERMAL:**
  - MAXIMUM MEAN DAILY TEMPERATURE = 38°
  - MINIMUM MEAN DAILY TEMPERATURE = -48°
- **WIND:**
  - HOURLY MEAN WIND PRESSURE (50YR) = 1.02 kPa
- **BRAKING FORCE:** CONSIDERED
- **COLLISION:** NOT CONSIDERED
- **ADDITIONAL DESIGN ASSUMPTIONS:**
  - THE SLC COMPOSITE DECK PROVIDES LATERAL STABILITY TO THE PIER PILE BENTS BY ACTING AS A DIAPHRAGM BETWEEN THE ABUTMENTS
  - MAXIMUM PIER HEIGHT LIMITED TO 6.0 m AS MEASURED FROM STREAMBED TO UNDERSIDE OF PIER PILE CAP
  - MAXIMUM LOCAL SCOUR DEPTH OF 1.0 m
  - BRIDGE SKEW ANGLES CONSIDERED: 0°, 15°, 30° AND 40°
- **BRIDGE LENGTH:** IT IS THE RESPONSIBILITY OF OTHERS USING THESE PLANS TO DETERMINE THE SUITABILITY OF THE DESIGN WHEN THE BRIDGE LENGTH EXCEEDS 48.0 m AND TO MAKE DESIGN ADJUSTMENTS IF AND WHERE REQUIRED

CONSTRUCTION

- ALL CONSTRUCTION WORK SHALL BE IN ACCORDANCE WITH THE STANDARD SPECIFICATIONS FOR BRIDGE CONSTRUCTION
- FIELD WELDING OF THE PIER PIPE PILE TO HORIZONTAL BRACE SHALL CONFORM TO SECTION 13.4.1 "FIELD WELDING OF STRUCTURAL MEMBERS" OF THE STANDARD SPECIFICATIONS FOR BRIDGE CONSTRUCTION
- PILES SHALL BE DRIVEN TO THE TIP ELEVATIONS SHOWN ON THE SITE SPECIFIC DRAWINGS AND IN ACCORDANCE WITH SECTION 3 OF THE STANDARD SPECIFICATIONS FOR BRIDGE CONSTRUCTION TO ACHIEVE THE MINIMUM CAPACITIES SHOWN IN TABLES 1 AND 2 OF THIS DRAWING
- PIER PILES SHALL PENETRATE A MINIMUM OF 6 m BELOW STREAMBED OR AS SHOWN IN THE SITE SPECIFIC DRAWINGS
- PILE TOLERANCES SHALL BE IN ACCORDANCE WITH THE STANDARD SPECIFICATIONS FOR BRIDGE CONSTRUCTION
- ALL REINFORCEMENT SHALL HAVE A CLEAR CONCRETE COVER OF 75 mm UNLESS NOTED OTHERWISE
- PILE CONCRETE HAS ACHIEVE15 MPa PRIOR TO PLACEMENT OF PIER CAP CONCRETE
- ALL CORNERS SHALL HAVE A 20 mm CHAMFER OR FILLET UNLESS NOTED OTHERWISE
- CONCRETE SURFACE FINISHES SHALL BE FINISHED IN ACCORDANCE WITH THE STANDARD SPECIFICATIONS FOR BRIDGE CONSTRUCTION

BACKFILL

- THE CONTRACTOR MAY ELECT TO ERECT THE GIRDERS PRIOR TO BACKFILLING. IN THIS CASE, THE BACKFILLING MAY COMMENCE IMMEDIATELY AFTER GIRDERS ARE SECURED IN PLACE
- IF BACKFILLING COMMENCES PRIOR TO GIRDER ERECTION, THE CONTRACTOR SHALL PROVIDE A RESTRAINT SYSTEM WITH INSTRUMENTATION TO MONITOR SUBSTRUCTURE DEFLECTION. THE RESTRAINT AND MONITORING SYSTEMS SHALL BE ACCEPTABLE TO THE CONSULTANT DURING BACKFILLING

GIRDER INSTALLATION

- REFER TO STANDARD SLC COMPOSITE BRIDGE GIRDER DRAWINGS (LATEST REVISION)

MATERIALS

- ALL CONCRETE SHALL BE CLASS C EXCEPT PILE CONCRETE SHALL BE USED FOR PIPE PILE INFILL. SULPHATE RESISTANT HYDRAULIC CEMENT (TYPE HS OR HSb) SHALL BE USED
- GIRDER DOWELS SHALL BE FABRICATED FROM SMOOTH ROUND BAR CONFORMING TO CSA G40.21M - 300W
- ALL STEEL PLATE AND SHAPES SHALL CONFORM TO THE REQUIREMENTS OF CSA G40.21M GRADE 350W UNLESS NOTED OTHERWISE. PIER PILE STD PIPE BRACING MATERIAL SHALL CONFORM TO THE REQUIREMENTS OF ASTM A53. PIER PIPE PILES SHALL CONFORM TO THE REQUIREMENTS OF ASTM 252 GRADE 2 (Fy = 240 MPa)
- PIER PILES AND BRACES SHALL BE HOT-DIPPED GALVANIZED. GALVANIZING MAY BE OMITTED FROM PILE SURFACES LOCATED MORE THAN 1 000 mm BELOW STREAMBED. ALL EXPOSED FIELD WELDS OF GALVANIZED MATERIAL SHALL BE THOROUGHLY CLEANED AND REPAIRED BY METALLIZING IN ACCORDANCE WITH ASTM - A780, METHOD A3 METALLIZING
- GALVANIZING SHALL CONFORM TO ASTM A123/A123MAND ASTM F2329
- ALL WELDING SHALL CONFORM TO THE CURRENT AWS SPECIFICATION D1.5
- PLAIN ELASTOMERIC BEARING PADS (60 HARDNESS) SHALL BE IN ACCORDANCE WITH SECTION 8, BEARINGS OF THE STANDARD SPECIFICATION FOR BRIDGE CONSTRUCTION
- DOWEL HOLE GROUT SHALL BE SIKA 212 OR AN APPROVED PRODUCT SELECTED FROM ALBERTA TRANSPORTATION PRODUCT LIST. THE MINIMUM 28 DAY COMPRESSIVE STRENGTH OF DOWEL GROUT SHALL BE 40 MPa

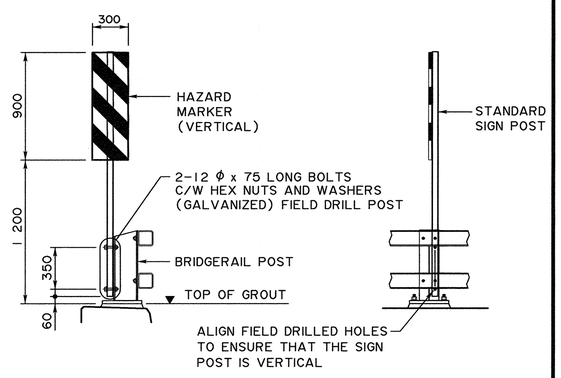

HAZARD MARKER DETAILS

1:25

(SHOWN AS FOR TL-4
DOUBLE TUBE TYPE BRIDGERAIL)
2 REQUIRED - RIGHT HAND
2 REQUIRED - LEFT HAND
REQUIRED IF SPECIFIED IN SITE SPECIFIC GENERAL LAYOUT

- WORK THESE DRAWINGS TOGETHER WITH SITE SPECIFIC GENERAL LAYOUT AND STANDARD SLC COMPOSITE BRIDGE GIRDER DRAWINGS S-1771, S-1772, S-1773, S-1774, S-1775, S1776 AND A-1777

REV	DATE	REVISION	BY
5			
4			
3			
2			
1			

DESIGNER RI CHECKER KA

RECOMMENDED DIRECTOR BRIDGE ENGINEERING

APPROVED EXECUTIVE DIRECTOR TECHNICAL STANDARDS BRANCH

DATE Oct 06, 2022

Alberta Transportation

STANDARD SLC COMPOSITE BRIDGES SLC510 GIRDERS WITH CAST-IN-PLACE CONCRETE SUBSTRUCTURES - SHEET 1

DATE	SHEET	DRAWING
2020-11-17	1 OF 4	S-1778-20