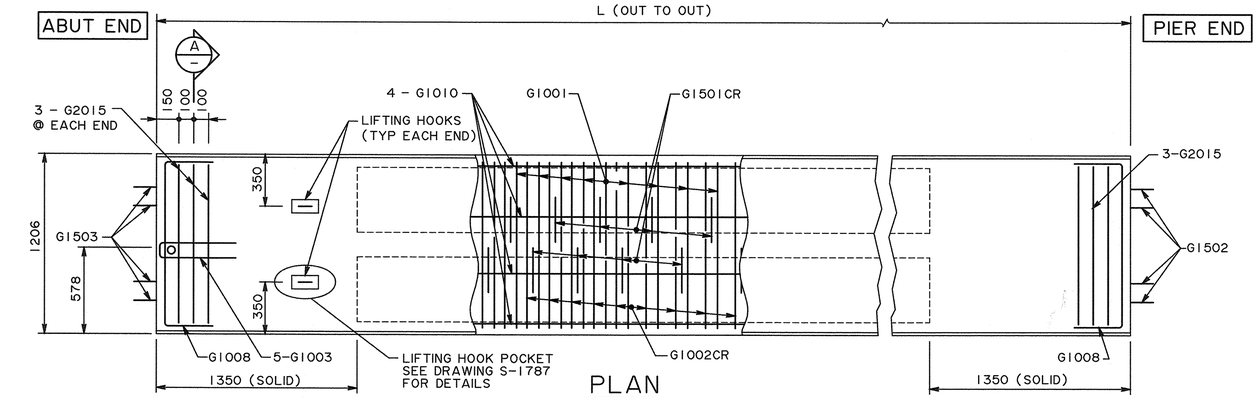

PLAN
1:20

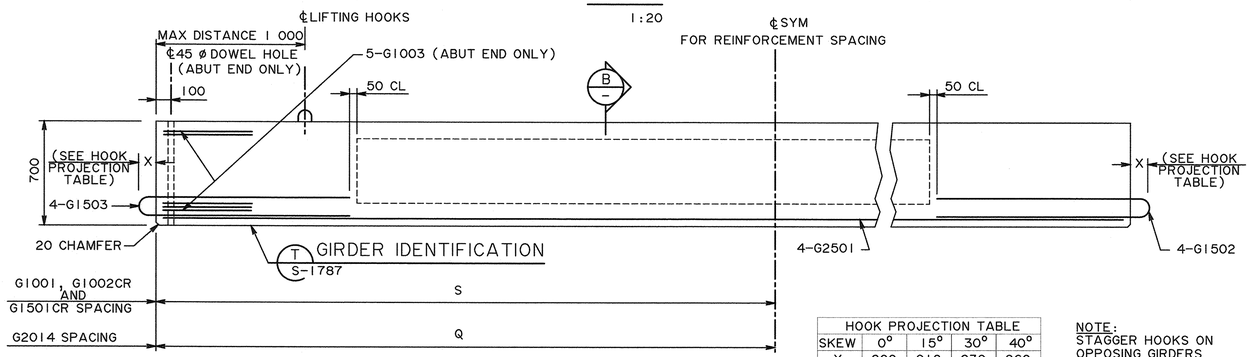

HOOK PROJECTION TABLE				
SKEW	0°	15°	30°	40°
X	200	210	230	260

NOTE:
STAGGER HOOKS ON OPPOSING GIRDERS

ELEVATION
1:20

BAR TYPES
(ALL BAR DIMENSIONS ARE OUT TO OUT)

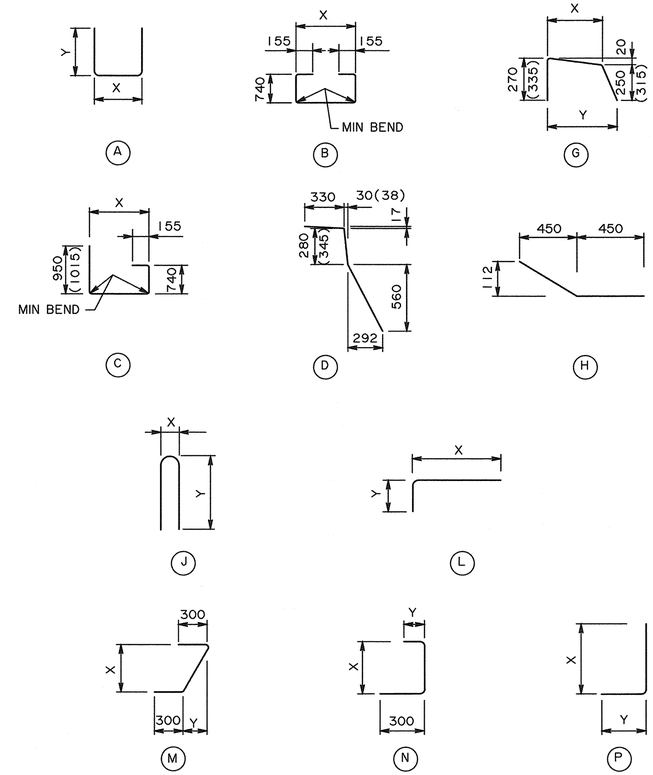

BAR LIST: INTERIOR GIRDER

MARK	SIZE	TYPE	X	Y	LENGTH
G1001	10	A	1125	390	1905
G1002CR	10	B	1125		2915
G1003	10	J	100	510	1080
G1008	10	A	1000	300	1600
G1010	10	STR	FULL LENGTH OF GIRDER		
G1501CR	15	N	740	170	1210
G1502	15	J	140	VARIES	VARIES
G1503	15	J	140	VARIES	VARIES
G1516	15	S	630	140	910
G2014	20	STR			1100
G2015	20	STR			950
G2501	25	STR	FULL LENGTH OF GIRDER		

-SUFFIX LETTER "CR" ON BAR MARK DENOTES CORROSION RESISTANT REINFORCING BARS

NOTE:
- FOR DIMENSIONS THAT VARY WITH CURB HEIGHT, DIMENSIONS ARE GIVEN AS:
  XXX FOR 350 CURB
  (XXX) FOR 415 CURB

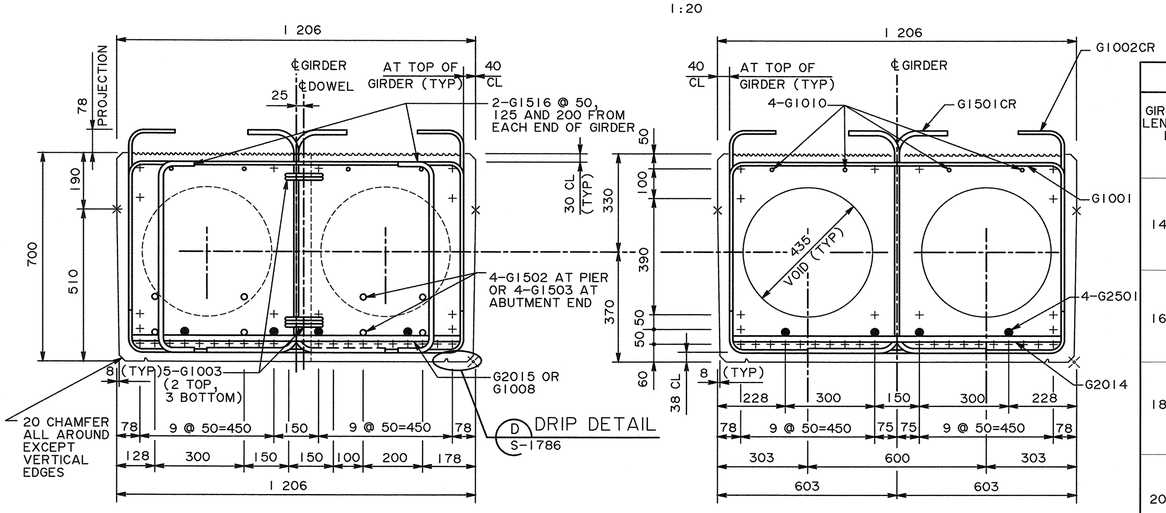

A SECTION
1:10

B SECTION
1:10

GIRDER INFORMATION TABLE
o— STRANDS ●— DEBONDED STRANDS

GIRDER LENGTH L	THEORETICAL GIRDER WEIGHT (tonnes) INTERIOR 415CURB/350CURB	INITIAL FORCE PER STRAND IMMEDIATELY PRIOR TO TRANSFER (kN)	FINAL DESIGN FORCE PER STRAND AFTER ALL LOSSES (kN)	INTERIOR GIRDER	CURB GIRDER	DEBONDED STRANDS (ND=NO. OF DEBONDED STRANDS) (D=DEBONDED LENGTH FROM GIRDER END, mm) INTERIOR GIRDER	CURB GIRDER	STIRRUP SPACING S (mm)	G2014 SPACING Q (mm)
14 m	21.0/29.6/28.3	182	151	N=18	N=16	ND=2 D=1400	ND=2 D=1400	50,2@75,3@100, 11@150,6@200, 3@250,5@300, 4@350	500 2@2200 2100
16 m	23.7/33.6/32.1	182	146	N=24	N=22	ND=2 D=1600	ND=2 D=1600	50,2@75,3@100, 10@150,10@200, 3@250,5@300, 5@350	500 3@2200 900
18 m	26.4/37.6/35.8	182	142	N=28	N=26	ND=4 D=1800	ND=4 D=1800	50,2@75,3@100, 11@150,4@200, 5@250,9@300, 6@350	500 3@2200 1900
20 m	29.1/41.5/39.6	182	138	N=32	N=30	ND=6 D=2000	ND=6 D=2000	50,2@75,3@100, 11@150,6@200, 3@250,15@300, 4@350	500 4@2200 700

- FOR GENERAL NOTES, SEE DRAWINGS S-1782 AND S1786

DEAD LOAD TABLE

SPAN (m)	INTERIOR GIRDER (kN/m) GIRDER	125 mm DECK	90 mm ACP	150 mm DECK	CURB GIRDER (415 mm) (kN/m) GIRDER	125 mm DECK	90 mm ACP	CURB GIRDER (350 mm) (kN/m) GIRDER	150 mm DECK
14	14.71	4.40	2.60	5.12	20.79	2.46	1.46	19.84	2.87
16	14.50				20.61			19.66	
18	14.39				20.47			19.52	
20	14.30				20.37			19.41	

REV	DATE	REVISION	BY
5			
4			
3			
2			
1			

DESIGNER KA CHECKER BH

RECOMMENDED DIRECTOR BRIDGE ENGINEERING

APPROVED EXECUTIVE DIRECTOR TECHNICAL STANDARDS BRANCH

DATE Oct 06, 2022

Alberta Transportation

STANDARD SLC COMPOSITE BRIDGES
SLC700 PRESTRESSED CONCRETE GIRDERS
INTERIOR GIRDER

DATE	SHEET	DRAWING
2020-11-17	4 OF 7	S-1785-20