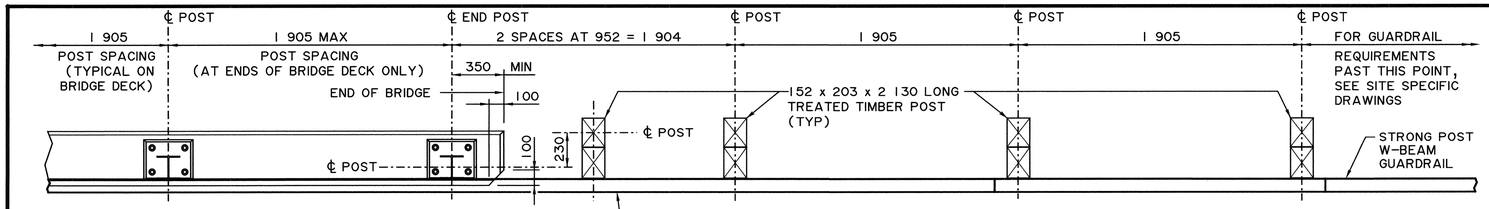

PLAN
1:20

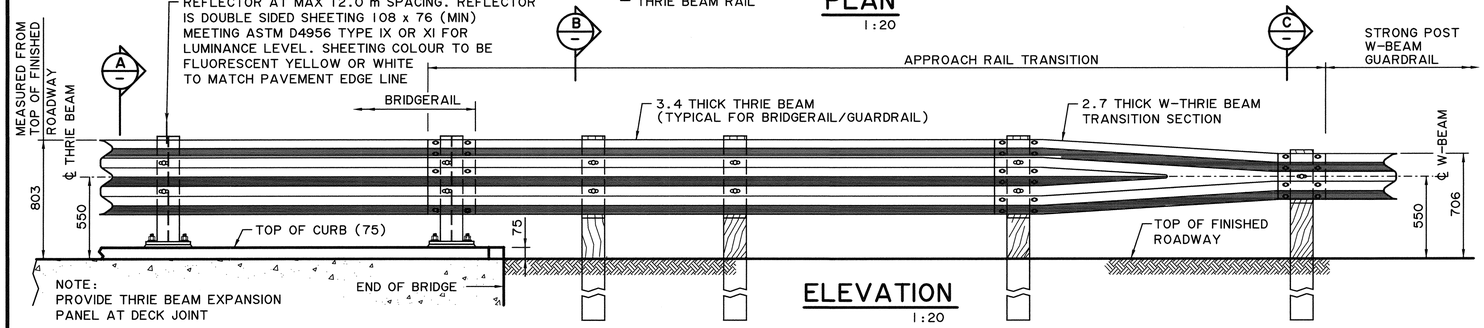

ELEVATION
1:20

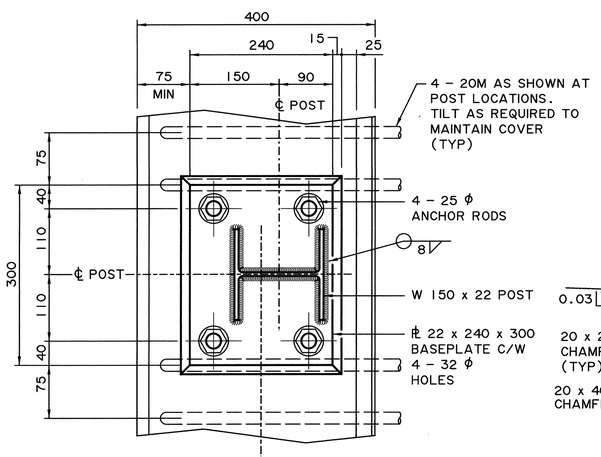

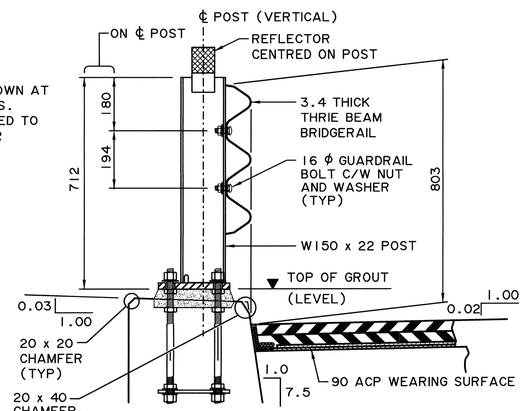

A SECTION
(ACP WEARING SURFACE) 1:10

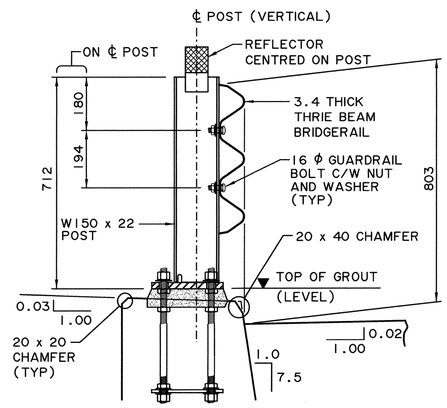

A SECTION
(CONCRETE TO GRADE) 1:10

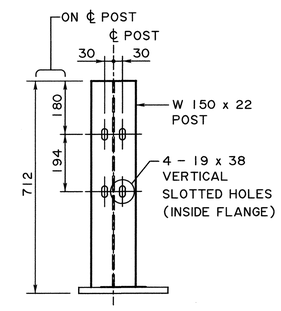

POST DETAIL
1:10

GENERAL NOTES

- ALL DIMENSIONS ARE IN MILLIMETRES UNLESS NOTED OTHERWISE
- RAILING CONFIGURATION IS BASED ON A RAILING CONFIGURATION THAT HAS BEEN CRASH TESTED AND MEETS THE REQUIREMENTS OF PERFORMANCE LEVEL 1 OF THE AASHTO GUIDE SPECIFICATIONS FOR BRIDGE RAILING, 1989. (EQUIVALENT TO NCHRP 350, TEST LEVEL 2)
- THE DECK REINFORCEMENT SHOWN AT POST LOCATIONS ON THIS DRAWING IS FOR RESISTING THE BARRIER IMPACT LOAD EFFECTS FOR TL-2 LOADING WITH A 225 THICK CONCRETE DECK. DESIGN OF ADDITIONAL DECK REINFORCEMENT SHALL BE CARRIED OUT ON A SITE SPECIFIC BASIS TO RESIST APPLICABLE DEAD AND TRAFFIC LIVE LOADS
- RAILING SHALL BE USED WITH CURB CONFIGURATION SHOWN
- USE OF THIS DRAWING IS LIMITED TO DECK ON GIRDER BRIDGES

FABRICATION

- BRIDGERAIL INCLUDING APPROACH RAIL TRANSITION SHALL BE IN ACCORDANCE WITH THE STANDARD SPECIFICATIONS FOR BRIDGE CONSTRUCTION SECTION 12 AND SECTION 14
- ALL CONCRETE SHALL BE CLASS HPC ($f'c$ = 45 MPa)
- ALL NOTED CORNERS SHALL HAVE A 20 CHAMFER OR FILLET UNLESS NOTED OTHERWISE
- ALL REINFORCING STEEL SHALL HAVE A MINIMUM YIELD STRENGTH OF 400 MPa AND SHALL BE CORROSION RESISTANT IN ACCORDANCE WITH THE STANDARD SPECIFICATIONS FOR BRIDGE CONSTRUCTION SECTION SECTION 5
- CLEAR CONCRETE COVER IS 60 UNLESS NOTED OTHERWISE. CLEAR CONCRETE COVER TO REINFORCING STEEL SHALL BE WITHIN CONCRETE PLACEMENT TOLERANCES AS SPECIFIED IN THE STANDARD SPECIFICATIONS FOR BRIDGE CONSTRUCTION SECTION 5
- ALL PLATE STEEL AND STRUCTURAL SHAPES SHALL CONFORM TO CSA G40.21M GRADE 350W OR ASTM A36
- ALL GUARDRAIL BOLTS, NUTS AND WASHERS SHALL CONFORM TO AASHTO M180. ALL BOLTS FOR CONNECTING THE STEEL SPACER TO POST SHALL CONFORM TO ASTM A307. ALL OTHER BOLTS SHALL CONFORM TO ASTM F3125 GRADE A325 TYPE 1 HEAVY HEX TYPE UNLESS NOTED OTHERWISE
- ANCHOR RODS SHALL CONFORM TO ASTM A193 GRADE B7(Fy = 725 MPa, Fu = 860 MPa). GALVANIZING OF ANCHOR RODS SHALL BE IN ACCORDANCE WITH THE PROCEDURE OUTLINED IN THE STANDARD SPECIFICATIONS FOR BRIDGE CONSTRUCTION
- ALL NUTS AND WASHERS SHALL CONFORM TO ASTM A563 AND F436 RESPECTIVELY UNLESS NOTED OTHERWISE
- ALL W-BEAM AND THRIE BEAM GUARDRAIL (INCLUDING W-THRIE BEAM TRANSITION SECTION) SHALL HAVE A MINIMUM YIELD STRENGTH OF 345 MPa
- ALL WELDING SHALL CONFORM TO CURRENT AWS SPECIFICATION D1.5
- ALL STEEL MATERIALS SHALL BE HOT-DIP GALVANIZED AFTER FABRICATION IN ACCORDANCE WITH ASTM A123/123M AND F2329 UNLESS NOTED OTHERWISE
- THE BOTTOM SURFACE OF THE BASEPLATES SHALL BE COATED WITH AN APPROVED COATING SYSTEM, SUITABLE FOR APPLICATION ON GALVANIZED STEEL, TO PREVENT CONTACT BETWEEN THE ZINC AND THE GROUT. THE COLOUR SHALL BE MEDIUM GREY
- TIMBER POSTS AND SPACERS SHALL BE COAST DOUGLAS FIR, PACIFIC COAST HEMLOCK OR LODGEPOLE PINE CONFORMING TO THE STRESS GRADE "SELECT STRUCTURAL POSTS AND TIMBERS" (NLGA PARAGRAPH 131 a)

ERECTION

- ALL ALIGNMENT NUTS MUST BE "SNUG TIGHT" BEFORE ANCHOR RODS ARE FULLY PRETENSIONED
- NUTS ON BRIDGERAIL ANCHOR RODS SHALL BE TIGHTENED ⅓ TURN PAST THE "SNUG TIGHT" CONDITION
- ALL DIMENSIONS ARE MEASURED PARALLEL TO TOP OF BRIDGE DECK AND ALONG THE CENTRELINE OF ANCHOR ROD ASSEMBLIES
- LINE AND ELEVATION OF RAIL SHALL HAVE A TOLERANCE OF 6
- ALL NON-STANDARD GUARDRAIL LENGTHS SHALL BE SAW CUT TO SUIT AND ALL NON-STANDARD GUARDRAIL HOLES SHALL BE DRILLED. FLAME CUTTING OF GUARDRAIL SHALL NOT BE ALLOWED. APPLY TWO COATS OF ZINC RICH PAINT ON AREAS DAMAGED BY SAW CUTTING OR DRILLING

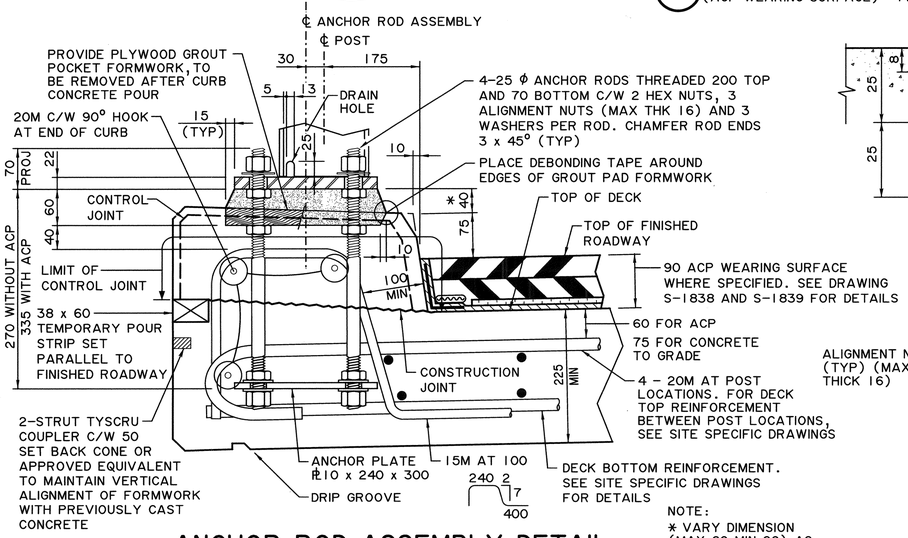

ANCHOR ROD ASSEMBLY DETAIL
1:5

NOTE:
ANCHOR ROD ASSEMBLY SHALL BE MINIMUM 25 CLEAR FROM BOTTOM OF DECK

NOTE:
* VARY DIMENSION (MAX 60 MIN 20) AS REQUIRED TO MEET RAIL HEIGHT AND ALIGNMENT

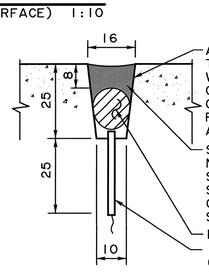

CONTROL JOINT DETAIL
1:1

NOTES:

- AFTER THE ENTIRE DECK HAS BEEN CAST, THE CONCRETE CURB SHALL BE PLACED CONTINUOUSLY WITH FORMED CONTROL JOINTS AT 1 905 SPACING. LAST CURB SECTION CAN BE LONGER THAN 1 905 AT BRIDGE ENDS. AT CONTROL JOINTS, LONGITUDINAL REINFORCEMENT IN THE CURB SHALL BE DISCONTINUOUS AND HAVE 60 CONCRETE COVER FROM THE CENTRELINE OF THE JOINT
- CENTRE CONTROL JOINTS BETWEEN BRIDGERAIL POSTS
- CONTROL JOINT CRACK INDUCER SHALL BE REMOVED PRIOR TO SURFACE PREPARATION AND APPLICATION OF SEALANT PRIMER
- CONTROL JOINT SEALANT SHALL BE APPLIED AND CURED PRIOR TO PLACING WATERPROOFING AND ACP

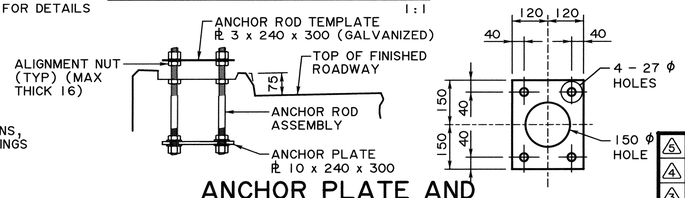

ANCHOR PLATE AND ANCHOR ROD TEMPLATE DETAIL
1:10

NOTE:
ANCHOR ROD TEMPLATE C/W NUTS AND ALIGNMENT NUTS TO BE INSTALLED DURING FABRICATION OF ANCHOR ROD ASSEMBLIES. ANCHOR ROD TEMPLATE AND ALIGNMENT NUTS TO BE REMOVED AFTER CURING OF DECK CONCRETE AND PRIOR TO INSTALLATION OF W 150 x 22 POST AND BASEPLATE

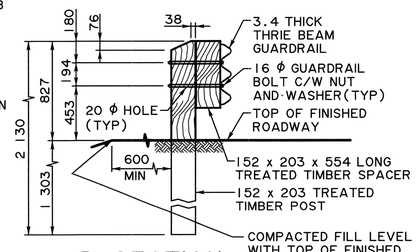

B SECTION
1:25

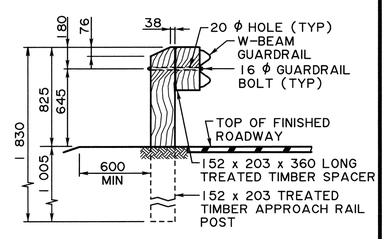

C SECTION
1:25

REV	DATE	REVISION	BY
5			
4			
3			
2			
1			

DESIGNER CM CM | CHECKER MC MT

RECOMMENDED DIRECTOR BRIDGE ENGINEERING

APPROVED EXECUTIVE DIRECTOR TECHNICAL STANDARDS BRANCH
D. Williamson
DATE 2021·3·2

Alberta Transportation

TL-2 THRIE BEAM BRIDGERAIL ON 75 mm HIGH CURB WITH STRONG POST W-BEAM GUARDRAIL

DATE	SHEET	DRAWING
2020-09-04	1 OF 1	S-1797-20