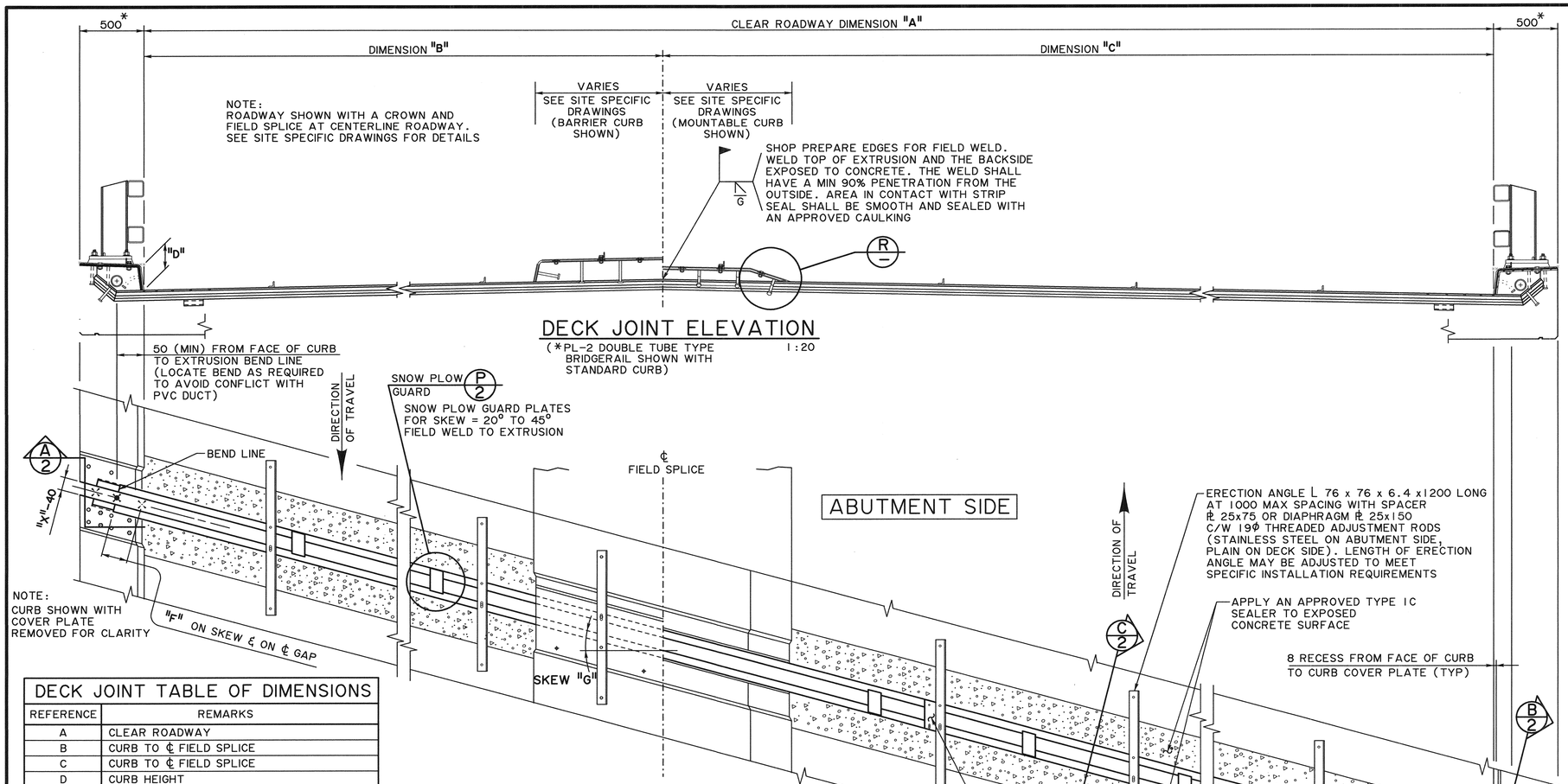

DECK JOINT ELEVATION

(*PL-2 DOUBLE TUBE TYPE BRIDGERAIL SHOWN WITH STANDARD CURB) 1:20

DECK JOINT PLAN

(STANDARD CURBS SHOWN) 1:20

DECK JOINT TABLE OF DIMENSIONS	
REFERENCE	REMARKS
A	CLEAR ROADWAY
B	CURB TO ¢ FIELD SPLICE
C	CURB TO ¢ FIELD SPLICE
D	CURB HEIGHT
E	CURB COVER PLATE WIDTH
F	DISTANCE FROM INSIDE CURB FACE TO EXTRUSION TURN UP
G	SKEW ANGLE
H	SIDEWALK CURB WIDTH
I	SIDEWALK COVER PLATE LF INSERT SPACING
J	SIDEWALK CURB COVER PLATE EMBEDDED NUT EDGE DISTANCE
K	SIDEWALK CURB COVER PLATE EMBEDDED NUT SPACING
L	SIDEWALK COVER PLATE CLEARANCE
M	SNOW PLOW GUARD PLATE CLEARANCE
X	JOINT GAP

SEAL SUMMARY TABLE	
SKEW (DEGREES)	MAXIMUM PERMISSIBLE JOINT MOVEMENT PARALLEL TO ROADWAY (mm)
	MULTI-WEB SEAL
0	55
10	56
15	57
20	55
25	45
30	38
35	33
40	29
45	27
50	25

SEAL SUMMARY TABLE NOTES:

- THE TABULATED JOINT MOMENT VALUES ARE BASED ON A JOINT SETTING TEMPERATURE OF + 15° AND MAXIMUM EFFECT TEMPERATURES OF -40°C AND + 40°C RESPECTIVELY
- MAXIMUM MOVEMENT PARALLEL TO THE JOINT (SHEAR MOVEMENT IS 13
- MAXIMUM MOVEMENT PERPENDICULAR TO JOINT IS 55
- MAXIMUM GAP "X" IS 115

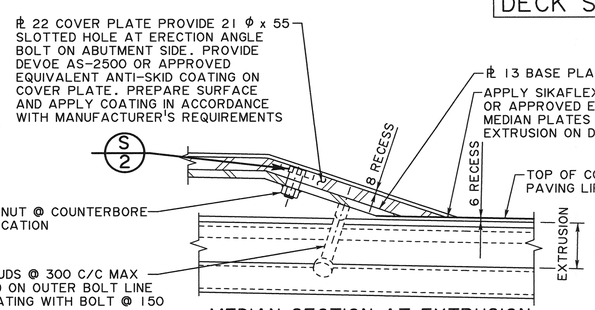

MEDIAN SECTION AT EXTRUSION

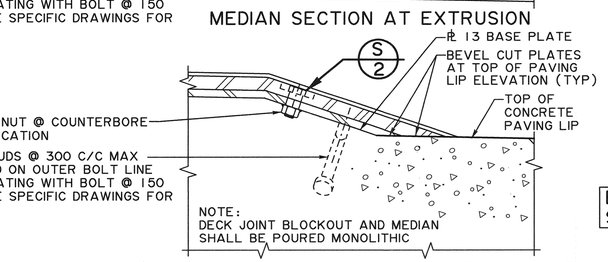

MEDIAN SECTION THROUGH PAVING LIP

R — DETAIL 1:5

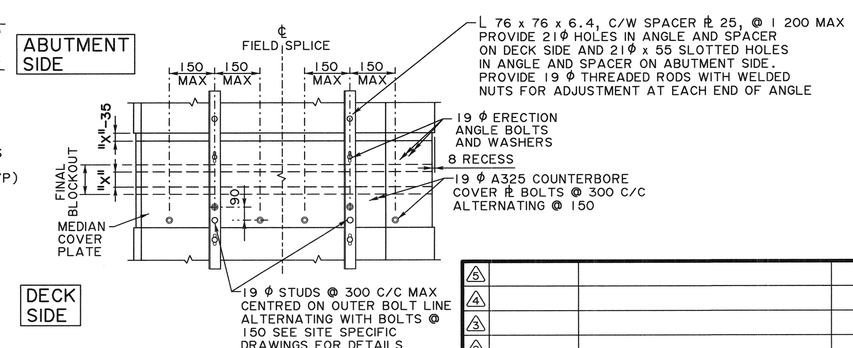

BARRIER CURB MOUNTABLE CURB

PLAN OF MEDIAN JOINT

1:20

GENERAL NOTES

- ALL DIMENSIONS ARE IN MILLIMETRES UNLESS NOTED OTHERWISE
- ALL REQUIREMENTS OF THE STANDARD SPECIFICATIONS FOR BRIDGE CONSTRUCTION SECTION 6 SHALL BE MET
- SNOW PLOW GUARDS ARE REQUIRED FOR BRIDGE SKEW ANGLES RANGING FROM 20° TO 45° INCLUSIVE
- SNOW PLOW GUARDS ARE NORMALLY REQUIRED FOR LHF SKEWS ONLY HOWEVER, FOR DIVIDED HIGHWAYS WHERE IT IS LIKELY FOR SNOW REMOVAL VEHICLES TO THROW SNOW TOWARDS THE MEDIAN, SNOW PLOW GUARDS ARE REQUIRED FOR BOTH RHF AND LHF SKEWS
- REFER TO SITE SPECIFIC DRAWINGS FOR DIMENSIONS "A" THROUGH "M" AND "X" AS SITE SPECIFIC DETAILS NOT SHOWN ON THIS DRAWING
- MAXIMUM GAP "X" SHALL NOT EXCEED 115 mm

MATERIALS AND FABRICATION

- ALL STEEL SHALL CONFORM TO THE REQUIREMENTS OF CSA G40.21M-300W OR ASTM A36
- CONTINUOUS SEALING SYSTEM TO BE ONE OF THE FOLLOWING TYPES:
  - WATSON BOMAN ACME "EFE400" WITH TYPE "M" EXTRUSION
  - DS BROWN "L2-0" SEAL WITH TYPE SSCM EXTRUSION
  - GOODCO Z-TECH SERIES "1000L" WITH ZT-100CS CELLULAR SEAL
  - AJ BRAUN BI-100 CELLULAR SYSTEM
  - RJ SERIES STRIP SEAL WITH TYPE RJM EXTRUSION
  - WERCHOLOZ GSH 141 "D"-W SYSTEM
- MULTI-WEB STRIP SEAL SHALL BE NEOPRENE OR APPROVED EQUIVALENT
- METAL EXTRUSIONS SHALL BE SUPPLIED IN TWO PIECES UNLESS NOTED OTHERWISE, STRIP SEAL SHALL BE SUPPLIED IN ONE CONTINUOUS LENGTH
- ALL METAL PARTS SHALL BE HOT DIP GALVANIZED AFTER FABRICATION EXCEPT ERECTION ANGLES, ERECTION BOLTS AND THREADED RODS. EMBEDDED THREADED RODS SHALL BE AISI TYPE 316 STAINLESS STEEL
- COVER PLATE BOLTS SHALL CONFORM TO ASTM A325 AND SHALL BE HOT DIPPED GALVANIZED
- ALL GALVANIZING SHALL MEET ASTM A123/A123M AND ASTM F2329 AS APPLICABLE
- ZINC METALIZING SHALL BE 180 MICRONS THICK AND IN ACCORDANCE WITH ASTM A780 METHOD 3
- ALL WELDING SHALL CONFORM TO CURRENT AWS D1.5
- CONTRACTOR SHALL SHOP ASSEMBLE FOR INSPECTION BY THE CONSULTANT IN A RELAXED CONDITION WITH ERECTION ANGLES REMOVED. APPROVAL OF ASSEMBLY REQUIRED PRIOR TO APPLICATION OF ERECTION ANGLES
- PRESET GAP IN SHOP FOR A TEMPERATURE OF +15°C AND TORQUE BOLTS
- JOINT SHALL BE TRANSPORTED WITH ERECTION ANGLES ATTACHED FINISHING STRIP INSTALLED AND THE EXTRUSION CAVITY SEALED WITH TAPE

JOINT INSTALLATION

- CONTRACTOR TO COORDINATE DECK AND ABUTMENT REINFORCING WITH DECK JOINT ANCHORAGE LOCATIONS TO ENSURE PROPER INSTALLATION OF JOINT WITHOUT CONFLICT. CONTRACTOR TO NOTIFY CONSULTANT OF ANY CONFLICTS AND RESULTING CORRECTIONS
- FIELD WELD SHOP PREPARED CROWN SPLICE AND METALIZE ALL DAMAGED GALVANIZED SURFACES
- ERECT JOINT ASSEMBLY INTO THE BLOCKOUT COMPLETE WITH ERECTION ANGLES ATTACHED AND TORQUED. ON ABUTMENT SIDE, SUPPORT ERECTION ANGLE WITH THREADED ROD SEATED INTO THE HOLE DRILLED INTO THE CONCRETE BACKWALL. ON THE DECK SIDE, SUPPORT THE ERECTION ANGLE WITH THREADED ROD SEATED ON THE STEEL PLATE AND PLYWOOD SHIM ASSEMBLY. IT IS THE CONTRACTOR'S RESPONSIBILITY TO ENSURE THAT SUFFICIENT SUPPORT, IN ADDITION TO THOSE SUPPORTS SHOWN ON THE DRAWINGS, IS PROVIDED WITH SUFFICIENT STRENGTH AND STIFFNESS SUCH THAT THE JOINT IS HELD SECURELY IN PLACE AT ALL STAGES OF CONSTRUCTION
- ADJUST THE THREADED RODS SO THE JOINT IS AT THE CORRECT GRADE, CROWN, AND ELEVATION. SET ELEVATIONS BY INSTRUMENT. MAINTAIN THE DECK JOINT'S PRESET GAP UNLESS ADVISED BY THE CONSULTANT TO RESET GAP
- PROCEED WITH CONCRETE PLACEMENT AFTER APPROVAL FROM THE CONSULTANT. ENSURE ANY TRAPPED AIR IS EXPELLED THROUGH BLEED HOLES
- AFTER CONCRETE HAS ACHIEVED INITIAL SET, LOOSEN THE ERECTION ANGLE BOLTS AT SLOTTED HOLES JUST ENOUGH TO ALLOW FOR THERMAL MOVEMENT
- ONCE CONCRETE HAS CURED, REMOVE ERECTION ANGLES AND FINISHING STRIPS
- CLEAN EXCESS CONCRETE AND DEBRIS
- APPLY SILANE SEALER TO EXPOSED CONCRETE SURFACES
- REMOVE CURB/MEDIAN/BARRIER/SIDEWALK COVER PLATES WHEN JOINT IS READY FOR STRIP SEAL INSTALLATION. INSTALL STRIP SEAL IN ONE CONTINUOUS PIECE
- WELD SNOW PLOW GUARD PLATES
- METALIZE ALL DAMAGED GALVANIZED SURFACES
- RE-INSTALL CURB/MEDIAN/BARRIER/SIDEWALK COVER PLATES AND TORQUE COVER PLATE COUNTERBORE BOLTS USING TURN OF NUT METHOD

- WORK THESE DRAWINGS TOGETHER: S-1810, S-1811 AND S-1812

REV	DATE	REVISION	BY
5			
4			
3			
2			
1			

DESIGNER CM CM CHECKER MT MT

RECOMMENDED DIRECTOR BRIDGE ENGINEERING

APPROVED EXECUTIVE DIRECTOR TECHNICAL STANDARDS BRANCH
D. Williamson
DATE 2021.3.2

Alberta Transportation

TYPE 1 STRIP SEAL DECK JOINT - SHEET 1

DATE	SHEET	DRAWING
2020-09-04	1 OF 3	S-1810-20