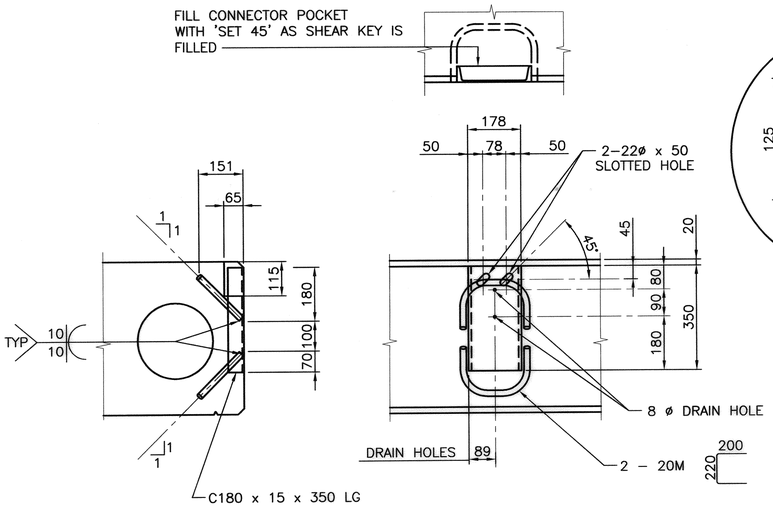

NOTE: ASSEMBLY TO BE HOT DIP GALVANIZED AFTER FABRICATION

S GIRDER CONNECTOR DETAILS
1:10

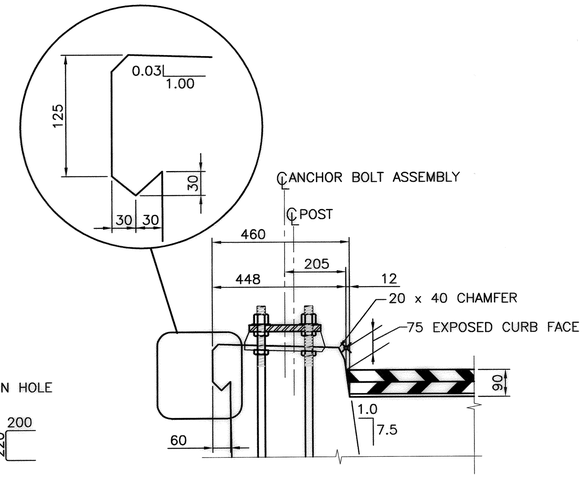

V CURB DETAILS
1:10

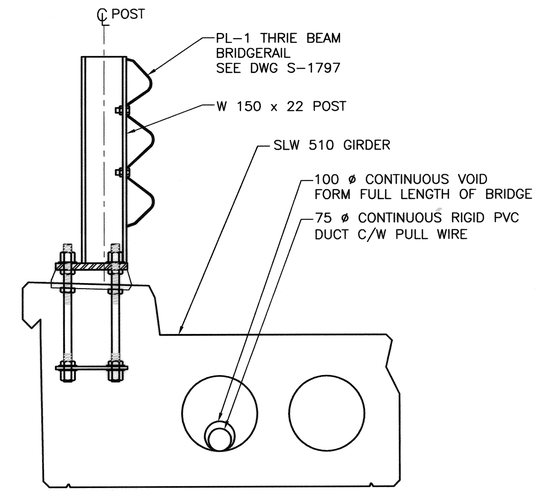

TYPICAL EXTERIOR GIRDER
1:10

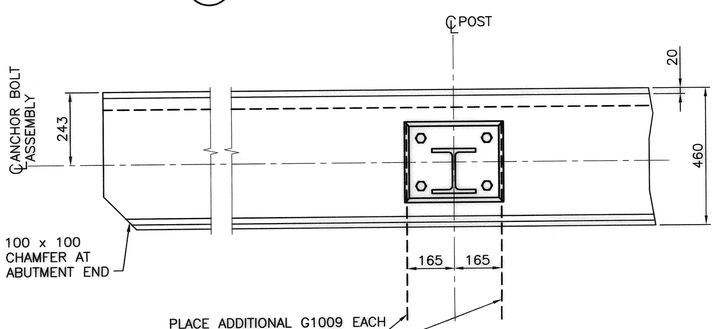

P AT POSTS
1:10

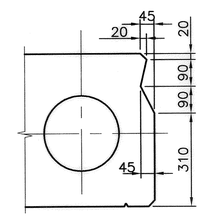

U SHEAR KEY GEOMETRY
1:10

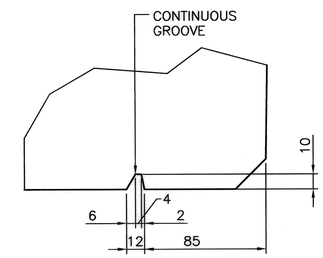

T DRIP GROOVE
1:2

- 2 – 15 Ø, 7 WIRE STRANDS. 1000 mm EMBEDMENT
- AFTER GIRDERS ARE ERECTED, LIFTING STRANDS ARE TO BE CUT OFF FLUSH WITH BOTTOM OF POCKET. POCKETS ARE TO BE FILLED WITH AN APPROVED PRE–BAGGED CONCRETE PATCHING MATERIAL FOR BRIDGES AS LISTED IN THE APPROVED PRODUCT LIST

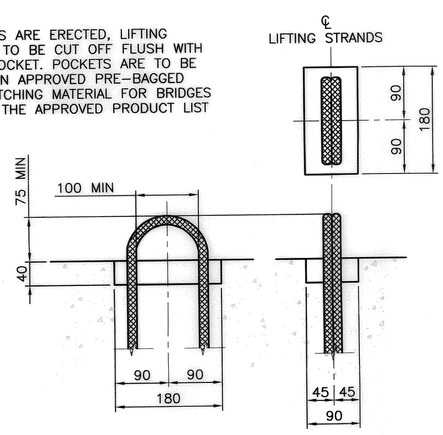

R LIFTING HOOK POCKET
1:5

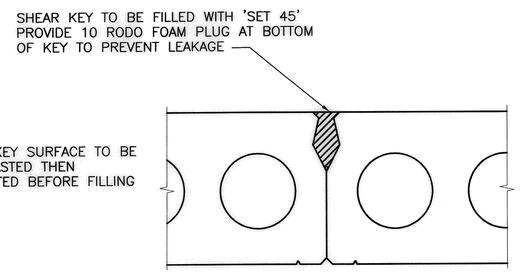

NOTE:
SHEAR KEY SURFACE TO BE SANDBLASTED THEN AIRBLASTED BEFORE FILLING

SHEAR KEY INFILL
1:10

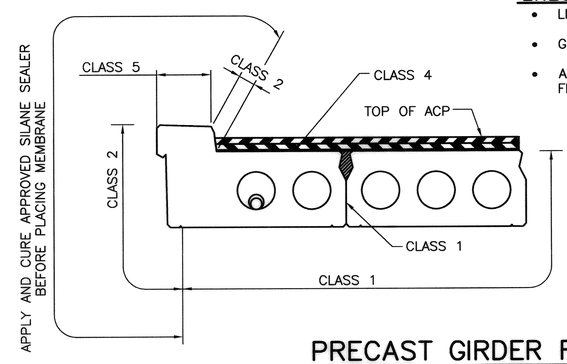

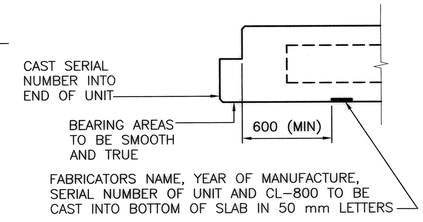

PRECAST GIRDER FINISHES
(BY FABRICATOR)
1:20

GENERAL NOTES

DESIGN

- CAN/CSA–S6–06 SPECIFICATIONS EXCEPT AS MODIFIED BELOW:
  - NO TENSION ALLOWED IN DECK SURFACE
  - SEE SPECIFIC GIRDER DRAWINGS FOR TENSION AT GIRDER SOFFIT
- LOADING:
  - LIVE LOAD – CAN/CSA–S6–06: CL–800
    - ONE WHEEL LINE PER GIRDER
  - DEAD LOAD – GIRDER
    - INTERIOR = 1.17 t/m
    - EXTERIOR = 1.48 t/m
    - WEARING SURFACE (90 mm ACP AND WATERPROOFING) = 0.26 t/m

MATERIALS

- CONCRETE SHALL BE STANDARD WEIGHT, CONTAINING 10% SILICA FUME AND NOT LESS THAN 5% AIR ENTRAINMENT
- 28 DAY CONCRETE STRENGTH:
  - 50 MPa FOR ALL SPANS EXCEPT 14.0 m
  - 70 MPa FOR 14.0 m SPAN
- CONCRETE RELEASE STRENGTH:
  - 35 MPa FOR ALL SPANS EXCEPT 14.0 m
  - 40 MPa FOR 14.0 m SPAN
- PRESTRESSING STEEL SHALL BE 15 ø, 7 WIRE LOW RELAXATION STRAND (fpu = 1860 MPa) IN ACCORDANCE WITH ASTM A416
- REINFORCING STEEL SHALL BE GRADE 400W IN ACCORDANCE WITH CSA G30.18M. TACK WELDING OF REINFORCING SHALL NOT BE ALLOWED
- BARS DENOTED 'SS' SHALL BE SOLID STAINLESS REINFORCING STEEL OF UNS S31653, S31803, S30400, S32304 OR S32101 MEETING ASTM A276 AND A955M WITH MINIMUM YIELD STRENGTH OF 420 MPa
- BARS DENOTED 'CR' SHALL BE AS SPECIFIED FOR 'SS' OR LOW CARBON/CHROMIUM REINFORCING STEEL MEETING ASTM A1035 WITH MINIMUM YIELD STRENGTH OF 690 MPa
- GIRDER DOWELS AND CHANNEL RUB RAIL SHALL CONFORM TO THE REQUIREMENTS OF CSA G40.21 GRADE 300W AND SHALL BE HOT–DIP GALVANIZED AFTER FABRICATION
- BUTTON HEADED BOLTS, NUTS AND WASHERS FOR RUB RAIL SHALL MEET THE REQUIREMENT OF ASTM A307

FABRICATION

- GIRDERS SHALL CONFORM TO THE CURRENT REQUIREMENT OF THE SPECIFICATIONS FOR BRIDGE CONSTRUCTION SECTION 7 – PRECAST CONCRETE UNITS
- ALL GALVANIZING SHALL CONFORM TO ASTM A123/A123M AND ASTM F2329
- ADJUST REINFORCEMENT WHERE REQUIRED TO CLEAR GIRDER CONNECTIONS AND LIFTING HOOK ASSEMBLIES. STIRRUP SPACING IS TO BE MAINTAINED
- ALL EXPOSED CONCRETE CORNERS SHALL HAVE A 20 mm CHAMFER OR FILLET UNLESS NOTED OTHERWISE

ERECTION

- LIFTING FORCE SHALL BE VERTICAL AT ALL TIMES
- GIRDERS SHALL BE MAINTAINED LEVEL AT ALL TIMES
- ANY FREE SPACE BETWEEN CONNECTORS SHALL BE FILLED WITH DROP–IN WASHERS

DILLON CONSULTING

PERMIT TO PRACTICE
DILLON CONSULTING LIMITED
Date 2012–01–04
PERMIT NUMBER: P2528
The Association of Professional Engineers, Geologists and Geophysicists of Alberta

DESIGNER: PROFESSIONAL ENGINEER KELIN G. WILLIAMSON ALBERTA — DATE 2012–01–04

CHECKER: PROFESSIONAL ENGINEER JAMES A. SKAPSKI ALBERTA — DATE 2012–01–04

REV	DATE	REVISIONS	BY
6			
5			
4			
3			
2			
1			

RECOMMENDED
DIRECTOR BRIDGE ENGINEERING
D Williamson

APPROVED
EXECUTIVE DIRECTOR
TECHNICAL STANDARDS BRANCH
DATE MAR. 5/12

Government of Alberta ■ Transportation

PRESTRESSED CONCRETE
SLW–510
DETAILS SHEET 1

AI BAR CODE	DATE	SHEET	DRAWING
	2012–01–04	5 OF 6	S–1836–12

2011-12-13

G:\CAD\115525\DESIGN\115525 S16-P.DWG