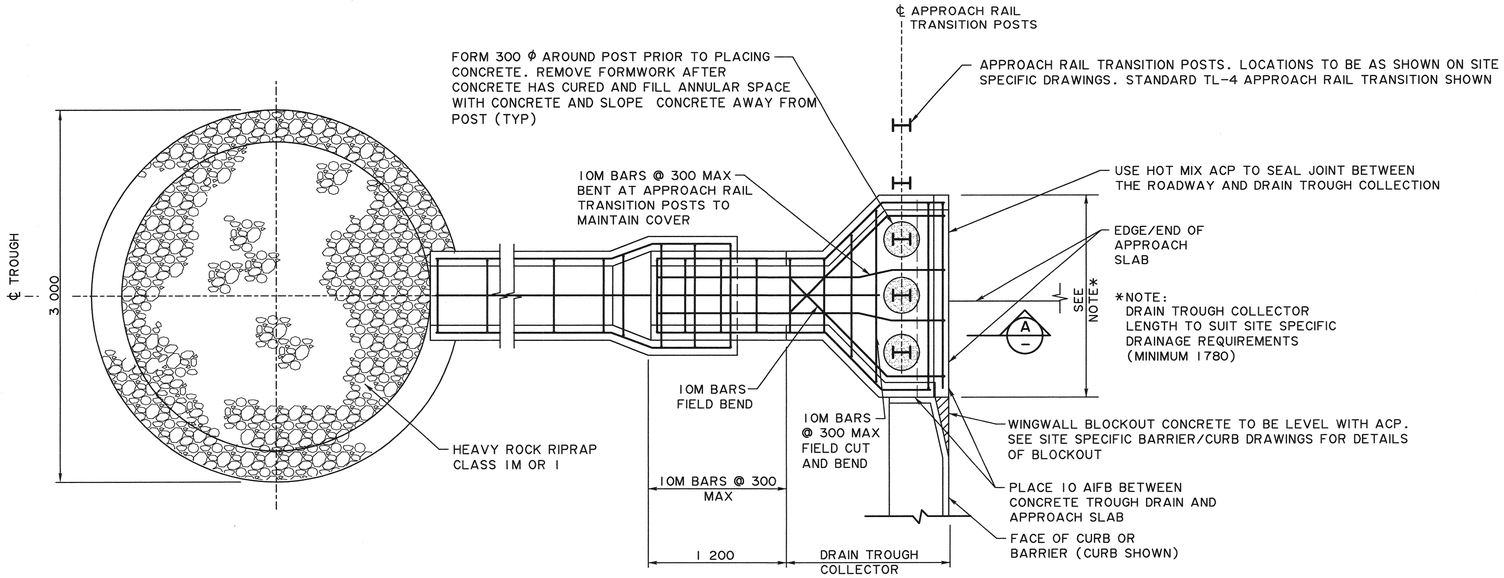

PLAN – CONCRETE DRAIN TROUGH

FOR CONVENTIONAL ABUTMENT – GRADE SEPARATION BRIDGES 1:25

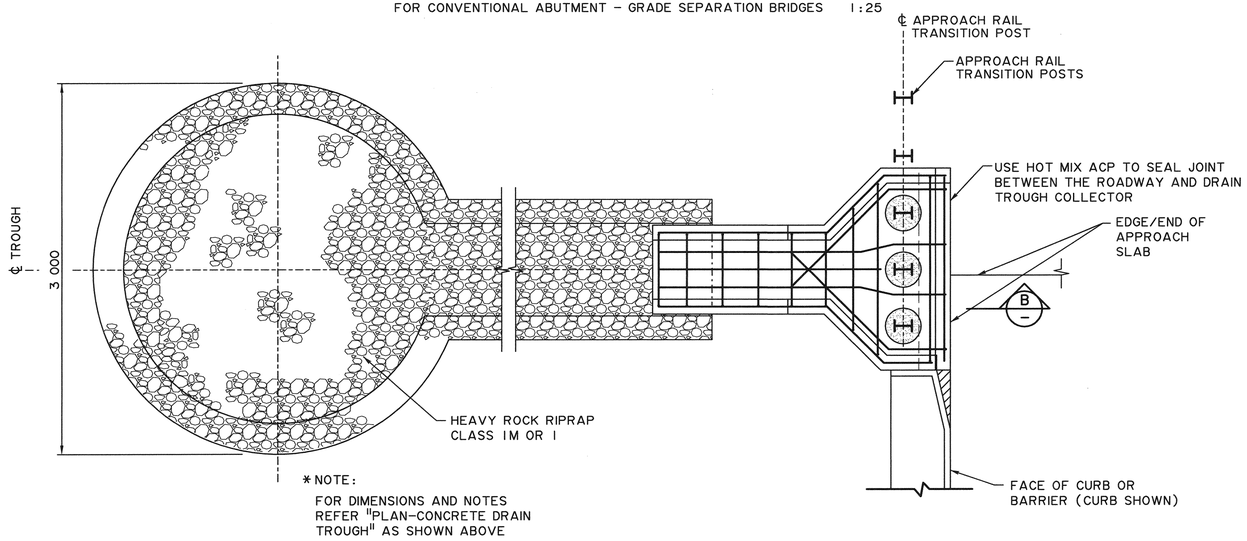

PLAN – HEAVY ROCK RIPRAP DRAIN TROUGH

FOR CONVENTIONAL ABUTMENT – WATER CROSSING BRIDGES 1:25

GENERAL NOTES

- THE DETAILS SHOWN ON THIS DRAWING REPRESENT DRAIN TROUGH DETAILS LOCATED AT THE ENDS OF CONVENTIONAL ABUTMENT WINGWALLS. SEE SITE SPECIFIC DRAWINGS FOR DIMENSIONS AND REINFORCING OF THE DRAIN TROUGH COLLECTOR
- ALL DIMENSIONS ARE IN MILLIMETRES UNLESS NOTED OTHERWISE
- ALL MATERIAL SHALL BE SUPPLIED IN ACCORDANCE WITH THE STANDARD SPECIFICATIONS FOR BRIDGE CONSTRUCTION
- CAST IN PLACE CONCRETE SHALL BE CLASS C WITH CLASS 1 FINISH IN ACCORDANCE WITH THE STANDARD SPECIFICATIONS FOR BRIDGE CONSTRUCTION SECTION 4
- REINFORCING STEEL SHALL BE IN ACCORDANCE WITH THE STANDARD SPECIFICATIONS FOR BRIDGE CONSTRUCTION SECTION 5
- ASPHALT IMPREGNATED FIBRE BOARD (AIFB) SHALL MEET THE REQUIREMENTS OF ASTM D1751
- SUPPLY AND PLACEMENT OF NON-WOVEN GEOTEXTILE FILTER FABRIC SHALL BE IN ACCORDANCE WITH THE STANDARD SPECIFICATION FOR BRIDGE CONSTRUCTION SECTION 10. NON-WOVEN GEOTEXTILE FILTER FABRIC SHALL BE KEYED 300 INTO THE SUB-GRADE ALL AROUND BENEATH THE ROCK RIPRAP IN ORDER TO ANCHOR THE FABRIC

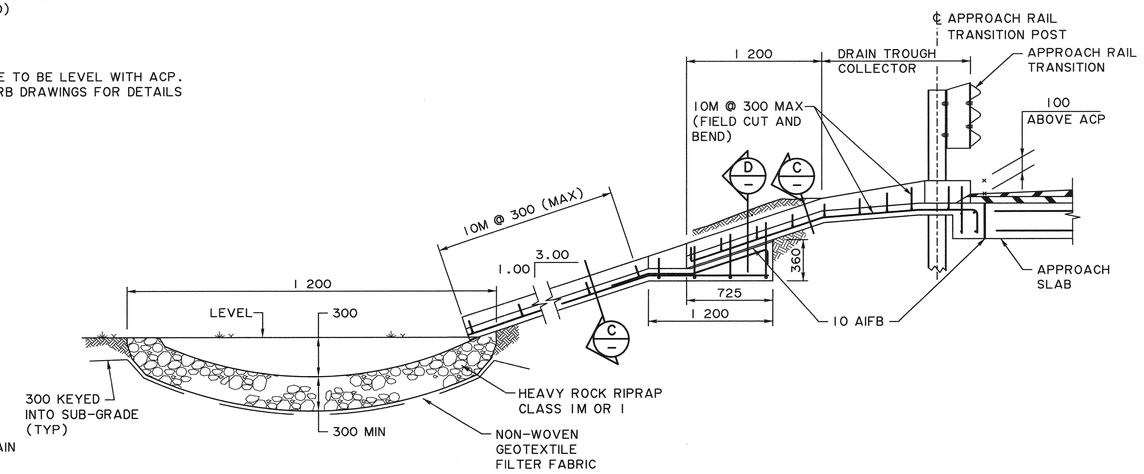

A SECTION

FOR CONVENTIONAL ABUTMENT – GRADE SEPARATION BRIDGES 1:25

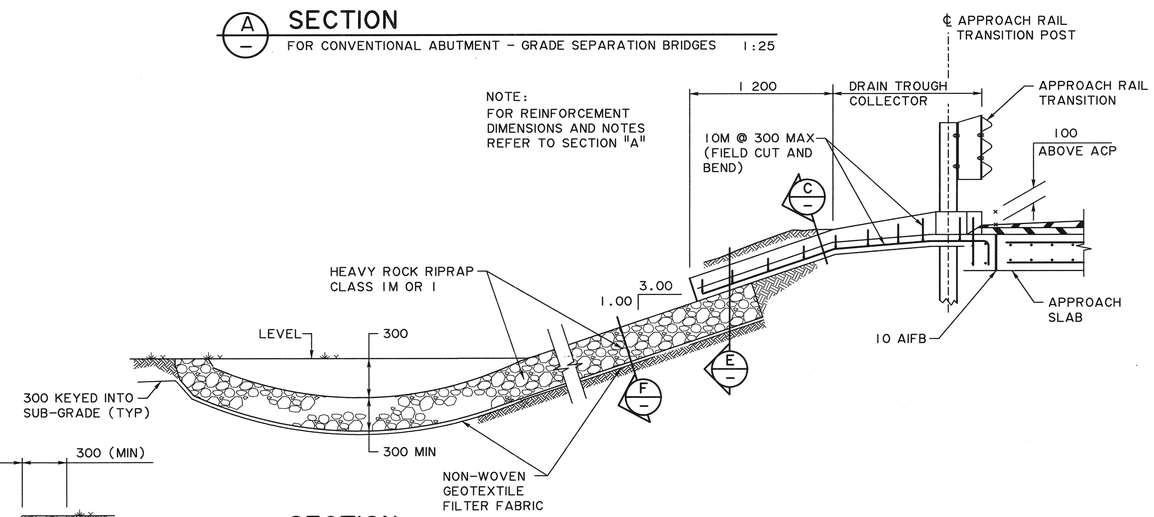

B SECTION

FOR CONVENTIONAL ABUTMENT – WATER CROSSING BRIDGES 1:25

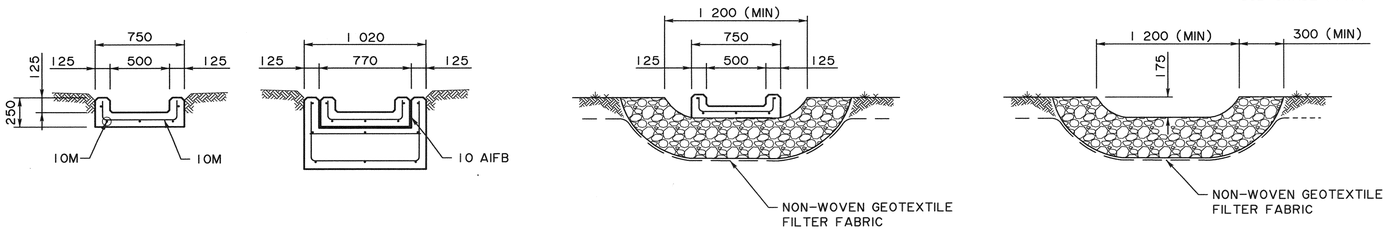

C SECTION 1:25

D SECTION 1:25

E SECTION 1:25

F SECTION 1:25

REV	DATE	REVISION	BY
5			
4			
3			
2			
1			

DESIGNER MT CHECKER DB DB

RECOMMENDED DIRECTOR BRIDGE ENGINEERING

APPROVED EXECUTIVE DIRECTOR TECHNICAL STANDARDS BRANCH

D Williamson

DATE 2021-3-2

Alberta Transportation

STANDARD DRAIN TROUGH FOR CONVENTIONAL ABUTMENTS

DATE	SHEET	DRAWING
2020-09-04	1 OF 1	S-1841-20