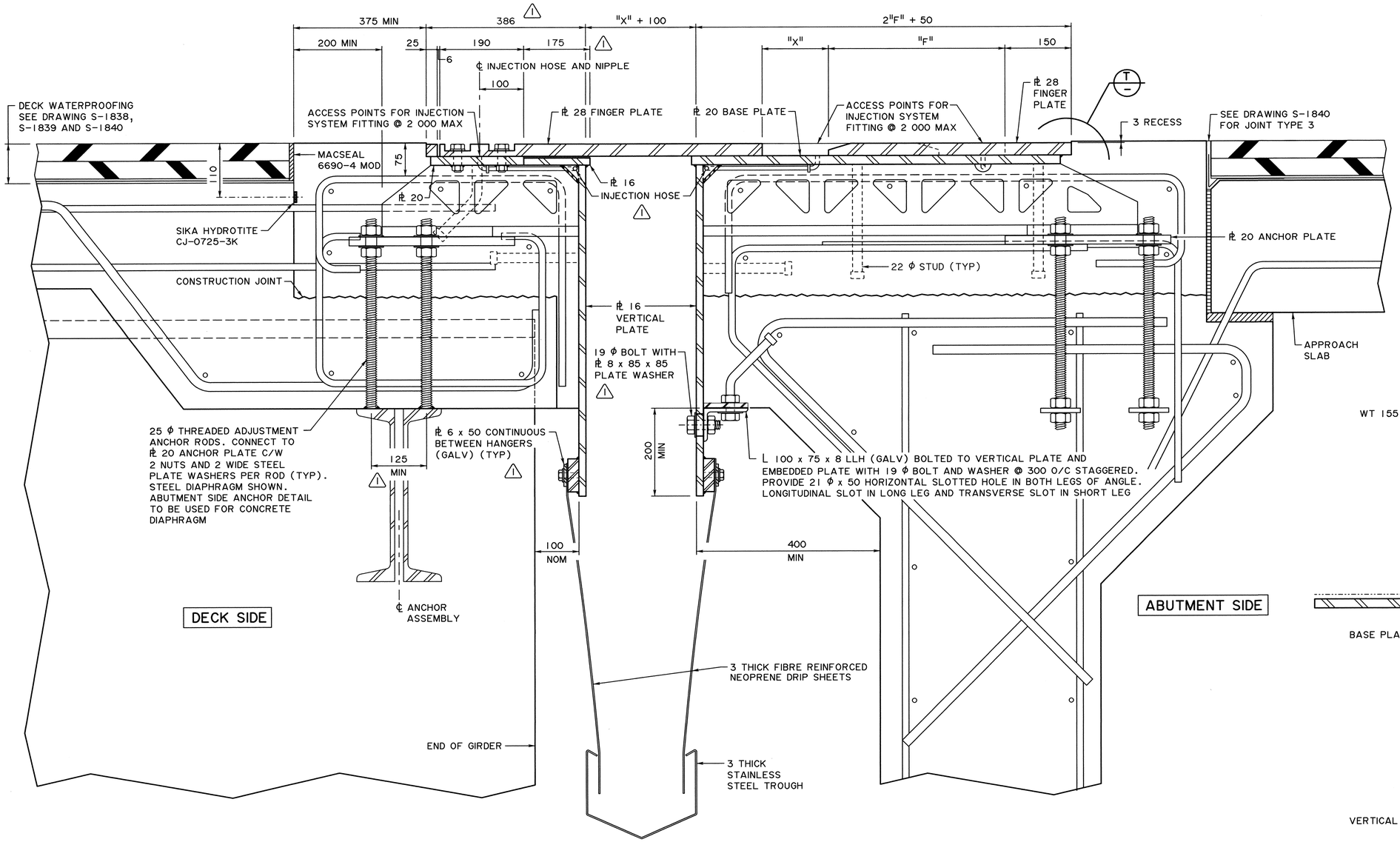

SECTION AT GIRDERS COMPLETED SECTION (A/1) 1:5

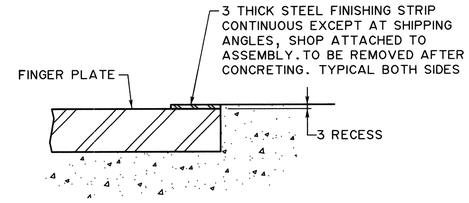

DETAIL (T) 1:2

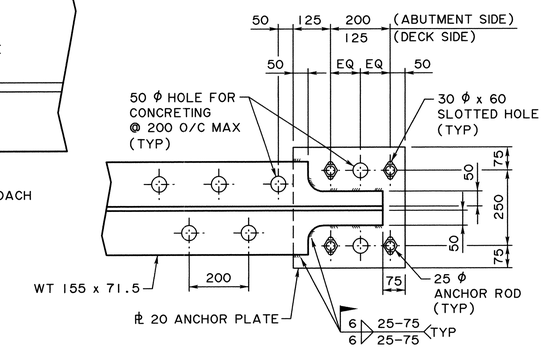

WT STIFFENER AND ANCHOR ROD ASSEMBLY

(PLAN ON ABUTMENT SIDE SHOWN) 1:10

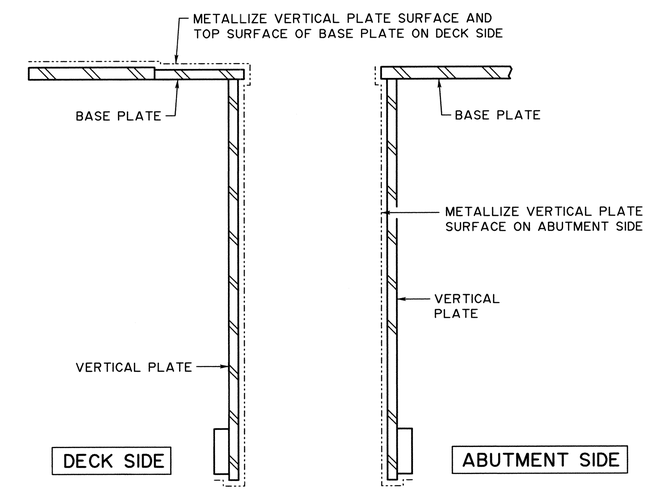

METALLIZING SURFACE LAYOUT

1:5

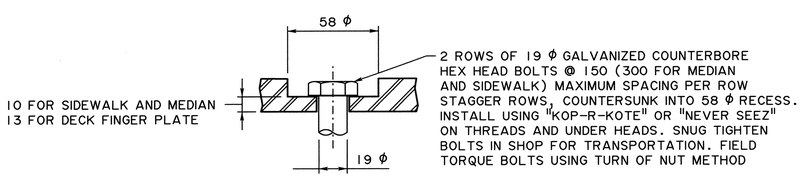

FOR DECK, MEDIAN AND SIDEWALK COVER PLATES

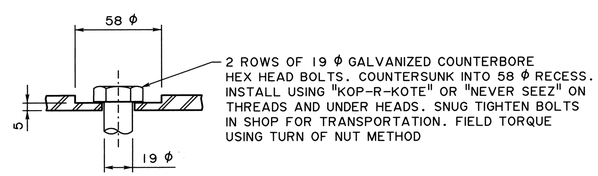

FOR CURB COVER PLATES

BOLT (S 2,4) 1:2

• WORK THESE DRAWINGS TOGETHER: S-1860, S-1861, S-1862, S-1863, S-1864 AND S-1865

REV	DATE	REVISION	BY
5			
4			
3			
2			
1	2021-02-11	GENERAL REVISIONS	MT

DESIGNER MT CHECKER CM

RECOMMENDED DIRECTOR BRIDGE ENGINEERING

APPROVED EXECUTIVE DIRECTOR TECHNICAL STANDARDS BRANCH

DATE Feb 16, 2021

Alberta Transportation

FINGER PLATE DECK JOINT ASSEMBLY – SHEET 3

DATE	SHEET	DRAWING
2020-09-04	3 OF 6	S-1862-20